ALPHA MICROSYSTEMS
RIGHT. FROM THE START.

For Authorized Personnel Only:

# Roadrunner 75 Upgrade Instructions

PDI-00176-11, Rev. A00

**FIRST EDITION:** April 2000

To re-order this document, request part number PDI-00176-11

## FCC Notice

This equipment has been tested and found to comply with the limits for a Class A digital device, pursuant to Part 15 of the FCC Rules. These limits are designed to provide reasonable protection against harmful interference when the equipment is operated in a commercial environment. This equipment generates, uses and can radiate radio frequency energy and, if not installed and used in accordance with the instruction manual, may cause harmful interference to radio communications. Operation of this equipment in a residential area is likely to cause harmful interference in which case the user will be required to correct the interference at his own expense.

## Canadian Department of Communications Compliance Statement

This equipment does not exceed Class A limits per radio noise emissions for digital apparatus set out in the Radio Interference Regulations of the Canadian Department of Communications. Operation in a residential area may cause unacceptable interference to radio and TV reception requiring the owner or operator to take whatever steps are necessary to correct the interference.

## Avis de Conformité aux Normes du Ministère des Communications du Canada

Cet équipment ne deapsse pas les limits de Classe A d'émission de bruits radioélectriques pour les appareils numeriques tels que prescrites par le Règlement sur le brouillage radioélectrique établi par le ministère des Communications du Canada. L'exploitation faite en milieu résidential peut entrainer le brouillage des réceptions radio et tele, ce qui obligerait le propriétaire ou l'opératour à pendre les dispositions nécessaires pour en éliminer les causes.

## Battery Warning

CAUTION: Danger of explosion if battery is incorrectly replaced. Replace only with the same or equivalent type recommended by the manufacturer. Discard used batteries according to the manufacturer's instructions.
ATTENTION: Il y a danger d'explosion s'il y a replacement incorrect de la batterie. Remplacer uniquement avec une batterie du même type ou d'un type recommandé par le constructeur. Mettre au rébut les batteries usagées conformément aux instructions du fabricant.

For Roadrunner 75 based systems, replace batteries with Panasonic or Ray-O-Vac BR1225 only. Use of another battery may present a risk of fire or explosion. Replacement batteries may be ordered from your authorized Alpha Micro reseller.

## Electrical Warning

This equipment contains components that can be damaged by static electricity. Follow all electronic discharge precautions when handling the equipment. For example, touch the metal back panel of the CPU or peripheral chassis to dissipate any electrical charge before touching the circuit boards or equipment within the chassis. After turning off power, before you open your computer chassis, unplug the cord from the electrical outlet to guard against electrical shock.

## SOFTWARE SECURITY DEVICE IDENTIFICATION NUMBER: _____

The Alpha Micro Software Security Device (SSD) is a customized integrated circuit that personalizes the computer, providing identity verification for it. Certain Alpha Micro and non-Alpha Micro software may require that your computer contain an SSD in order to run software that has been customized to run only on your computer.

Please enter the identification of your SSD above. The SSD identification number should be on your computer ID label under "SSD Serial No." (Another way of finding the number is to look at the SSD itself. The SSD is located in an integrated circuit location on the CPU board; its identification number is printed on the SSD itself.) Software vendors may ask you for the SSD number if they are customizing software to run only on your computer.

This document may contain references to products covered under the following U.S. Patent Number(s): 4,530,048

ALPHA MICROSYSTEMS
2722 Fairview Street
Santa Ana, CA 92704

# TABLE OF CONTENTS

**CHAPTER 1 - INTRODUCTION ..... 1**

GENERAL PRODUCT DESCRIPTION ..... 1
Roadrunner 75 Features ..... 1
Instruction Cache Memory ..... 2
Environmental Specifications ..... 2
Power Specifications ..... 3
AM-319-20 Features ..... 3

**CHAPTER 2 - COMPATIBILITY ..... 5**

SOFTWARE COMPATIBILITY ..... 5
HARDWARE COMPATIBILITY ..... 5
Compatible Board List ..... 5
Unsupported Hardware ..... 5
ROADRUNNER 75 SCSI TAPE AND HARD DISK DRIVE REQUIREMENTS ..... 6
SCSI Tape Drives ..... 7
SCSI Hard Disk Drives ..... 7
SCSI Dispatcher ..... 7

**CHAPTER 3 - UPGRADING ROADRUNNER 75 ON-BOARD MEMORY ..... 9**

ELECTRONIC EQUIPMENT HANDLING PRECAUTIONS ..... 9
INSTALLING MEMORY ..... 10
Changing Memory SIMMs ..... 11

**CHAPTER 4 - CONFIGURING THE ROADRUNNER 75 ..... 13**

ROADRUNNER 75 BOARD AND JUMPER DEFINITION TABLE ..... 13
ROADRUNNER 75 CONNECTORS ..... 15
ROADRUNNER 75 FLASH MEMORY BOOTING OPTION ..... 15
THE CMOS MENU ..... 16
Roadrunner 75 Initialization Routine ..... 16
CMOS Menu Options ..... 16
Important Note ..... 19
ETHERNET PORTS ..... 19
AM-319-20 BOARD CONFIGURATION ..... 20
REMOTE RESET CAPABILITY ..... 21
INSTALLING THE SSD CHIP ..... 22
REPLACING THE TIME AND DATE BATTERY ..... 23

Restoring Your CMOS Settings ..... 24
ON-BOARD SERIAL PORTS ..... 24
FRONT PANEL STATUS DISPLAY CODES ..... 24
SERIAL UPS MONITORING ..... 29

**CHAPTER 5 - BEGINNING A ROADRUNNER 75 UPGRADE ..... 31**

ELECTRONIC EQUIPMENT HANDLING PRECAUTIONS ..... 31
STEP 1 - PROTECTING YOUR DATA ..... 32
STEP 2 - UPGRADE CIRCUIT BOARDS AND PERIPHERALS ..... 32
STEP 3 - INSTALL THE CORRECT VERSION OF AMOS ..... 32
STEP 4 - CREATE A NEW SYSTEM MONITOR ..... 33
STEP 5 - CREATE A NEW SYSTEM INITIALIZATION FILE ..... 33
STEP 6 - CREATE NEW SUBSYSTEM DISK DRIVERS ..... 35
STEP 7 - NETWORK CONFIGURATION ..... 36
STEP 8 - PROTECT YOUR DATA AGAIN ..... 36
STEP 9 - INSTALL THE ROADRUNNER 75 HARDWARE ..... 36

**CHAPTER 6 - TESTING THE NEW SYSTEM ..... 37**

RUNNING A SELF-TEST ..... 37
SET YOUR CMOS CONFIGURATION AND BOOT ..... 37
RENAMING THE SYSTEM MONITOR AND INITIALIZATION FILES ..... 38
BACK UP AND MAKE A NEW WARM BOOT TAPE ..... 38
ADDITIONAL DOCUMENTATION ..... 38

**APPENDIX A - SCSI TERMINATION ..... 39**

SCSI TERMINATION USING EXTERNAL TERMINATOR OPTION ..... 39
ATTACHING EXTERNAL DEVICES ..... 40
TERMINATOR POWER ..... 41

**APPENDIX B - READ-AHEAD AND WRITE BUFFERING ..... 43**

INTRODUCTION ..... 43
READ-AHEAD ..... 43
Controlling Read-Ahead ..... 44
WRITE BUFFERING ..... 44
Potential Pitfalls ..... 45
Setting Up Write Buffering ..... 45
FINAL NOTES ..... 46

**APPENDIX C - AM-4000 PEDESTAL CHASSIS UPGRADE ..... 47**

PREPARING FOR THE UPGRADE ..... 47

ACCESSING YOUR HARDWARE ..... 47
Removing the Old I/O Panel and the AM-190 Board ..... 47
Removing Obsolete Hardware ..... 48
INSTALLING THE AM-319-20 BOARD ..... 48
THE NEW I/O PANEL ASSEMBLY ..... 48
INSTALLING THE ROADRUNNER 75 BOARD ..... 49
X-Bus Cable Routing ..... 50
Installing the SCSI Cable ..... 51
INSTALLING THE NEW I/O REAR PANEL ..... 51
FINISHING UP ..... 52

**APPENDIX D - AM-4000 RACK MOUNT CHASSIS UPGRADE ..... 53**

PREPARING FOR THE UPGRADE ..... 53
ACCESSING YOUR HARDWARE ..... 53
REMOVING THE OLD CPU ..... 53
EXTENDING THE CARD CAGE ..... 54
INSTALLING THE AM-319-20 BOARD ..... 54
NEW DC POWER HARNESS INSTALLATION ..... 55
REAR PANEL I/O ASSEMBLY ..... 56
INSTALLING THE ROADRUNNER 75 BOARD ..... 56
Installing the SCSI Cable ..... 59
FINISHING UP ..... 60

**APPENDIX E - AM-4000 IN AM-990 OR AM-990 JUMBO CHASSIS UPGRADE ..... 61**

PREPARING FOR THE UPGRADE ..... 61
ACCESSING YOUR HARDWARE ..... 61
REMOVE YOUR OLD CPU ..... 62
ASSEMBLING THE NEW REAR I/O PANEL ..... 63
INSTALLING THE AM-319-20 BOARD ..... 63
INSTALLING THE ROADRUNNER 75 BOARD ..... 65
X-Bus Cable Routing ..... 66
Installing the SCSI Cable ..... 67
INSTALLING NEW REAR I/O PANEL ..... 69
FINISHING UP ..... 69

**APPENDIX F - SUPER EAGLE & AM-6000 DESKSIDE CHASSIS UPGRADE ..... 71**

PREPARING YOUR SYSTEM FOR THE UPGRADE ..... 71
REMOVING CHASSIS COVER ..... 71
ACCESSING THE OLD CPU BOARD ..... 72
REMOVE OLD ROADRUNNER BOARD ..... 73
PREPARE CHASSIS FOR UPGRADE (SUPEREAGLE ONLY) ..... 73
INSTALLING THE ROADRUNNER 75 BOARD ..... 75
Installing the SCSI Cable ..... 76

FINISHING UP ..... 77

**APPENDIX G - SUPER EAGLE & AM-6000 IN AM-990 OR AM-990 JUMBO CHASSIS UPGRADE ..... 79**

PREPARING FOR THE UPGRADE ..... 79
ACCESSING YOUR HARDWARE ..... 79
ASSEMBLING THE NEW REAR I/O PANEL (SUPEREAGLE ONLY) ..... 80
REMOVING THE OLD CPU BOARD ..... 81
INSTALLING THE ROADRUNNER 75 BOARD ..... 81
X-Bus Cable Routing ..... 82
Installing the SCSI Cable ..... 82
INSTALLING NEW REAR I/O PANEL ..... 85
SuperEagle Systems ..... 85
AM-6000 Systems ..... 85
FINISHING UP ..... 87

**APPENDIX H: FLASH MEMORY BOOTING OPTION DETAILS ..... 89**

FLASH MEMORY ORGANIZATION ..... 89
FLASH MEMORY OPERATION ..... 89
BOOTING FROM THE ROADRUNNER 75 FLASH MEMORY ..... 90
STANDARD AM7000.INI CONTENTS ..... 90
ENHANCING FLASH MEMORY CONTENTS ..... 91
File NETWRK. ..... 91
File RESOLV. ..... 91
File CONFIG. (optional) ..... 91
FLASH MEMORY CONTENTS ..... 91
Monitors ..... 92
INIs ..... 92
Device drivers for the following: ..... 92
FLUTIL SOFTWARE UTILITY ..... 92
Flash memory Update ..... 92

**APPENDIX I: BOOT MESSAGES ..... 95**

**APPENDIX J: STANDARD FLASH AND DISK INIS ..... 97**

HARD DISK INI FILES ..... 97
AM7000.INI ..... 97
AMOS32.INI ..... 98
FLASH DISK INI FILES ..... 100
SINGLE INI ..... 100
AM-7000 INI ..... 100
AMOS32.INI ..... 101

# LIST OF ILLUSTRATIONS

Figure 3-1: ESD Wrist Strap ..... 9
Figure 4-1:Roadrunner 75 Board ..... 14
Figure 4-2: AM-319-20 Board Configuration ..... 21
Figure 4-3: SSD Chip Removal Tool ..... 22
Figure 4-4: AM-319-20 Backup Battery Removal ..... 23
Figure A-1: Active External Terminator Installation ..... 40
Figure C-1: AM-319-20 and Roadrunner 75 Cabling (Pedestal Chassis) ..... 50
Figure D-1: Top View, AM-319-20 and Roadrunner 75 Cabling (10-Slot Rack Mount Chassis) ..... 58
Figure D-2: Top View, Retainer Brackets (10-Slot Rack Mount Chassis) ..... 59
Figure E-1: AM-990 Enclosure Removal ..... 62
Figure E-2: AM-319-20 Board and Cable Routing (AM-990 Chassis) ..... 65
Figure E-3: AM-319-20 and Roadrunner 75 Cable Routing (AM-990 Chassis) ..... 66
Figure E-4: Retainer Bracket (detail) ..... 67
Figure E-5: Roadrunner 75 Retainer Bracket Placement ..... 68
Figure F-1: Deskside Chassis Cover Removal ..... 72
Figure F-2: Deskside Chassis Base Details ..... 74
Figure F-3: Deskside Chassis Rear Panel Configuration ..... 76
Figure G-1: AM-990 Enclosure Removal ..... 80
Figure G-2: AM-319-20 and Roadrunner 75 Cable Routing ..... 82
Figure G-3: Retainer Bracket (detail) ..... 83
Figure G-4: Roadrunner 75 Retainer Bracket Placement ..... 84
Figure G-5: AM-990 Rear Panel Configuration ..... 86
Figure H-1: Roadrunner 75 Flash Boot Memory Map ..... 89

# LIST OF TABLES

Table 3-1: Roadrunner 75 Memory Configuration ..... 10
Table 4-1: User Configurable Jumper Option Table for the Roadrunner 75 board ..... 15
Table 4-2:Roadrunner 75 - Connector Description Table ..... 15
Table 4-3: Front Panel Status Codes ..... 25
Table 5-1: Dispatcher Switch Table ..... 34

# Chapter 1 - Introduction

The Roadrunner 75 is a powerful upgrade for Alpha Microsystems computers. Employing the field-proven Roadrunner concept, it is built around two boards. One is the AM-176-10, or Roadrunner 75 board, as it's referred to in this manual. The other is the AM-319-20 system board, the same system board used in the AM-6000 Business Computer System.

The Roadrunner 75 board provides the Motorola 68060 CPU, memory, network interface, and wide SCSI bus interface. The AM-319-20 system board provides serial I/O, parallel I/O ports, two paddle card busses, and other system functions. The two-board combination allows higher performance and the versatility of modular upgrades. To upgrade existing systems:

- AM-6000 and Super Eagle systems: Replace the existing AM-176 CPU board with the new Roadrunner 75 board and associated 100BaseT Ethernet interface hardware.
- AM-4000: Replace the existing single-board processor with an Roadrunner 75, 100 Base T Ethernet hardware, and an AM-319-20.

The following AM-4000, Super Eagle, and 6000 system configurations can be upgraded with Roadrunner 75 capability:

- Single board and 6-slot in old style pedestal chassis
- VME 10-slot or 21-slot rack mount chassis
- AM-990 chassis
- AM-990 double-wide (jumbo) chassis
- Deskside Super Eagle and AM-6000 chassis

Please contact your dealer or Alpha Microsystems for information on the different upgrade kits used for each of these system types.

## GENERAL PRODUCT DESCRIPTION

This section outlines the Roadrunner 75 and AM319-20 boards' basic features and specifications.

## Roadrunner 75 Features

The basic features of the Roadrunner 75 are:

- Performance at over 100 MIPS (million instructions per second) at 75MHz
- 32-bit bi-directional data path
- 32-bit address path
- 4GB of direct memory addressability
- 128KB external cache memory SIMM

- 8KB on-chip processor instruction cache memory and 8KB of data cache
- Enhanced power fail restart circuitry
- Seven interrupt levels with vector capability
- DMA channel capability
- On-board bootstrap PROM and battery backed CMOS containing several boot routines that enable you to change the I/O device the computer boots from. Also contains full power-up self-test of various system features.
- On-board Flash Disk Boot capability
- On-board 100BaseT Ethernet controller with 32-bit DMA transfer capability
- On-board high performance Wide SCSI-2 expansion interface with 32-bit DMA controller
- Four on-board single inline memory module (SIMM) expansion slots, which support 60ns EDO DRAMs for up to 512MB of memory.

## Instruction Cache Memory

There is a high probability that the instructions in a computer program will be used repeatedly within a very short time. To take advantage of this probability and decrease retrieval time, the Roadrunner 75 board contains an external 128KB instruction cache, in addition to the 68060 internal cache.

This cache improves the overall system performance by reducing the number of clock cycles required by the processor to fetch information from memory, thereby increasing the bus bandwidth available for other bus masters in the system. During a write cycle, the cache circuitry writes data to the cache memory as well as to the item in main memory, maintaining consistency between the data in cache and the data in memory.

When the computer boots, the external cache is automatically enabled. If you have an application that requires you to disable the cache, you can enter the cache disabling command CBDS at AMOS command level. To re-enable the cache, enter the command CBEN.

## Environmental Specifications

| | |
|---|---|
| **Computer external operating temperature** | 60 to 90 degrees F (16 to 32.2 degrees C) |
| **Humidity** | 10% to 90% (non-condensing) |

***Environmental Specifications***

## Power Specifications

| *Voltage* | *Current Draw* |
|---|---|
| +5 volts | 5.1A max with 512MB DRAM<br>3.1A with 32MB DRAM |
| +12 volts | @30mA |

***Maximum DC Power Requirements***

The power requirements noted above are as observed during testing. Power requirements may vary depending on DRAM manufacturer.

## AM-319-20 Features

The following are the basic features of the AM-319-20:

- Four on-board serial I/O ports
- Supporting logic for four parallel ports
- SSD (Software Security Device) chip
- Ethernet port, with AUI (DB-15) and 10BaseT connectors, in addition to the 100BaseT Ethernet port on the Roadrunner 75.
- UPS monitoring port for switch-contact type functions, such as power failure and low battery.

# Chapter 2 - Compatibility

Before you proceed with your upgrade, it's important to make sure you have all the hardware and software you'll need. This chapter discusses the hardware and software compatibility issues that may arise during your Roadrunner 75 installation.

## SOFTWARE COMPATIBILITY

To be Roadrunner 75 compatible, the operating system must be AMOS 2.3A, patch release 06/00, or later.

Because the Roadrunner 75 has a number of features not found in earlier Alpha Micro CPU boards, you should not attempt to use the board with earlier versions of AMOS. Versions earlier than AMOS 2.3A, patch release 06/00, will not work.

## HARDWARE COMPATIBILITY

Only certain circuit boards are compatible with the Roadrunner 75 board. Following is a list of all such boards with their minimum acceptable revision levels.

### Compatible Board List

- AM-219 floppy controller board, Rev. A06
- AM-319-20 system board, Rev. B06
- AM-324 parallel printer board, Rev. A08
- AM-333 RJE paddle board, Rev. A00
- AM-359-00 or AM-359-01 serial I/O board, Rev. C05

All other I/O boards are incompatible. The next section gives a partial list of boards which aren't supported.

### Unsupported Hardware

Specifically, the following products are not supported for use with the Roadrunner 75 CPU board:

- AM-117-90 S-100 bus adapter
- AM-182 cache board
- AM-212 floppy controller
- AM-214 floppy controller

- AM-330-90 communications controller
- AM-350-00 serial I/O controller
- AM-350-01 serial I/O controller
- AM-353 synchronous I/O boards
- AM-355 6-port serial I/O board
- AM-358 8-port serial I/O board
- AM-362 and AM-340 Ethernet controllers
- AM-415 disk controller
- AM-515 intelligent SCSI controller
- AM-515-10 magnetic tape controller
- AM-520 disk controller
- AM-520-10 disk controller
- AM-630 VCR controller
- AM-640 magnetic tape controller
- AM-716 memory SIMMs
- AM-730 and AM-740 memory boards.

## ROADRUNNER 75 SCSI TAPE AND HARD DISK DRIVE REQUIREMENTS

The SCSI controller on the Roadrunner 75 board is a 32-bit, bus mastering RISC processor that controls data flow between SCSI peripherals and the CPU/memory subsystem. The controller provides a 68-pin Wide SCSI bus interface which is used to attach all SCSI peripherals to the Roadrunner 75 board.

This Wide SCSI bus supports both wide and narrow SCSI peripherals. Narrow SCSI peripherals are attached via the utilization of the appropriate narrow SCSI adapters available from Alpha Microsystems. Narrow peripherals such as streamer tapes, DAT tapes, CD-ROMs, and the AM-642 SCSI-to-Pertec Converter for ½" tape drives are supported.

The Wide SCSI bus has the following advantages:

- Disk-intensive applications are potentially faster with Wide SCSI disk drives.
- It supports up to 15 devices, where standard SCSI supports only seven, so you can potentially work with bigger configurations.

To ensure reliable SCSI operation, the SCSI bus must be ***actively*** terminated. The passive external terminators used on earlier AMOS systems are not adequate for the Roadrunner 75. The wide SCSI cabling upgrade kit includes an active terminator for the Wide SCSI bus (PRA-00222-20). See Appendix A for more information about SCSI bus termination.

## SCSI Tape Drives

Any SCSI tape drive which works with the AM-4000, Super Eagle, or AM-6000 will also work in your upgraded Roadrunner 75, using a narrow SCSI adapter for narrow SCSI peripherals. No firmware revisions are necessary.

In order to warm boot from a Tandberg streaming tape drive, make sure you enter it as the alternate boot unit ID in the CMOS Configuration Menu.

## SCSI Hard Disk Drives

For optimum performance, use Wide SCSI-2 drives attached. Mixing SCSI-1, SCSI-2, and Wide SCSI-2 disks on the same bus tends to degrade performance and is not recommended.

## SCSI Dispatcher

You must define a SCSI dispatcher in the system initialization command file. AMOS uses the dispatcher to communicate with the SCSI controller chip. The dispatcher handles all communications with the SCSI controller chip.

There are two versions of the SCSI dispatcher:

- SCZ7K.SYS is a high-performance version of the SCSI dispatcher, which supports command queuing, synchronous transfers, multi-threaded operations, and scatter-gather operations.
- SIM7K.SYS is a simplified version of the SCSI dispatcher and does not support the high performance features supported in SCZ7K.SYS. You would use SIM7K.SYS when making warm boot tapes.

Using the SCZ7K.SYS dispatcher increases system performance greatly, and will allow you to use DCACHE and write cache efficiently. SCZ7K.SYS also supports several option switches to let you modify its performance, as described in Chapter 5.

Please refer to Chapter 5 for instructions on enabling the Roadrunner 75's SCSI dispatcher.

# Chapter 3 - Upgrading Roadrunner 75 On-Board Memory

The Roadrunner 75 has four on-board SIMM (single inline memory module) expansion slots, which support 60ns EDO DRAMs. Because the memory is located on-board, it can be accessed much faster than memory accessed over the VME bus—i.e., AM-730 and AM-740 memory boards used with earlier CPU boards.

The following are generalized procedures. ***Do not attempt any installation or mounting until you reach the appropriate place in the installation procedure for your configuration***. Please refer to the appropriate appendix for specific instructions.

After the Roadrunner 75 board is mounted securely, install the memory expansion SIMM modules.

## ELECTRONIC EQUIPMENT HANDLING PRECAUTIONS

While your computer's hardware is exposed and the AC power cord is unplugged, the components are vulnerable to damage caused by static discharge. Your body and clothing are capable of storing an electrical charge that can damage or destroy unprotected electronic components. Before you handle any computer hardware, make certain your work area is properly protected against static discharge. There are a number of commercially available static protection devices, like the wrist strap shown below, designed specifically to protect your equipment from harmful static discharge.

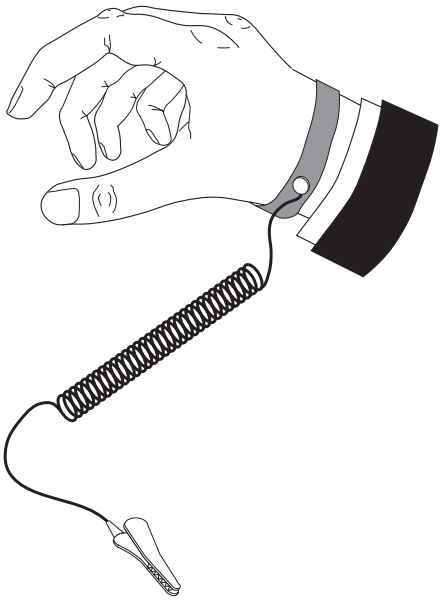

***Figure 3-1: ESD Wrist Strap***

## INSTALLING MEMORY

The Roadrunner 75 supports a minimum of 32MB and a maximum of 512MB of main memory. Memory is implemented as paired SIMM modules (of equal capacity) of 16MB, 32MB, 64MB, or 128MB. All memory SIMM modules must be of the EDO variety, and have an access time of 60ns or less. The following table shows the allowable memory SIMM configurations (above 256MB, only some configurations are shown—others are possible):

| **For this amount of memory…** | **Install these memory SIMMs** | | | |
|---|---|---|---|---|
| | **16MB** | **32MB** | **64MB** | **128MB** |
| **32MB** | 2 | -- | -- | -- |
| **64MB** | 4 | -- | -- | -- |
| **64MB** | -- | 2 | -- | -- |
| **96MB** | 2 | 2 | -- | -- |
| **128MB** | -- | 4 | -- | -- |
| **128MB** | -- | -- | 2 | -- |
| **160MB** | 2 | -- | 2 | -- |
| **192MB** | -- | 2 | 2 | -- |
| **256MB** | -- | -- | 4 | -- |
| **256MB** | -- | -- | -- | 2 |
| **320MB** | -- | 2 | -- | 2 |
| **384MB** | -- | -- | 2 | 2 |
| **512MB** | -- | -- | -- | 4 |

***Table 3-1: Roadrunner 75 Memory Configuration***

To install memory expansion SIMMs on the Roadrunner 75 board, use this procedure:

Remember, don't follow this procedure until you're at the proper place in the installation process for your upgrade.

1. Memory SIMMs must be installed in pairs of equal capacity and like manufacturer.
2. Always install the SIMMs of largest capacity first.
3. Always install the first pair of SIMM modules at Bank0. Use Bank1 for a second pair of SIMM modules.
4. Insert the first SIMM in connector J4. Align pin-1 at the notched end of the SIMM module with pin-1 on the connector.
5. Rotate the SIMM down toward the center of the Roadrunner 75 board to about a 45 degree angle. The SIMM will engage the metal retainer clips and click into position, locking the SIMM in place.
6. Repeat steps 4 and 5 for the second SIMM, at connector J6. If you are using a second pair of SIMMs, insert them into J5 and J7 using the same procedure. Note that the memory SIMM in J5 will have to be installed before installing the SIMM into J6.

## Changing Memory SIMMs

To remove a SIMM from its connector:

1. Power down the computer
2. Press out on the metal retainer clips and gently raise the top of the SIMM module , so it is free of the metal retainer clips.
3. Lift the SIMM out of the connector

# Chapter 4 - Configuring the Roadrunner 75

This chapter contains information you may need both before and after installing your Roadrunner 75. It covers:

- Jumpers and connectors on the Roadrunner 75 board
- CMOS setup
- Ethernet interface options
- AM-319-20 jumpers
- Remote reset capability
- Installing the SSD chip
- Changing the batteries on the AM-319-20 board
- On-board serial ports
- Front panel status display codes
- UPS monitoring information

We recommend that you safeguard your computer components by insuring that your work area is properly protected against static discharge. For more information, refer to Chapter 3.

## ROADRUNNER 75 BOARD AND JUMPER DEFINITION TABLE

Your Roadrunner 75 board has been factory tested and shipped with its configuration jumpers set in their standard default positions. There is only one area on the board which may require you to change jumper settings:

- Enabling or disabling the supply of SCSI bus termination (JP1) and SCSI terminator power (JP2) —default set at enabled.

The Roadrunner 75 board is shown in Figure 4-1 with all of its jumpers in their default positions. The illustration is followed by a jumper configuration table, showing the default setting for each user-configurable jumper on the board. You may want to check your board and make sure all jumpers are properly installed.

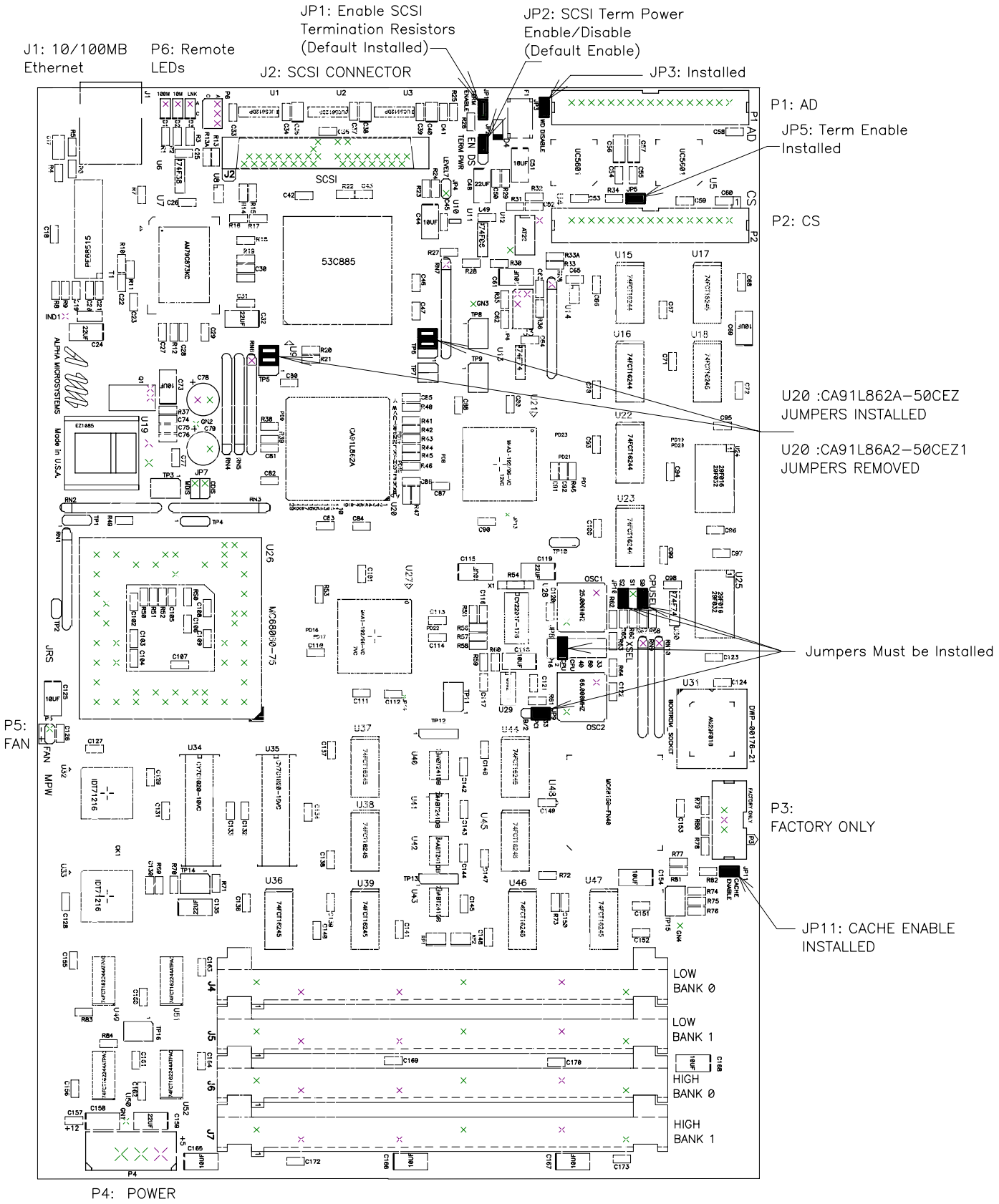


***Figure 4-1:Roadrunner 75 Board***

| *Jumper Number* | *Jumper Name* | *Default Setting* | *Notes* |
|---|---|---|---|
| JP1 | TERM ENABLE | IN | SCSI on-board termination resistors enabled. |
| JP2 | TERMPWR | EN | SCSI bus termination voltage,<br>EN = Enabled, DS = Disabled. |

***Table 4-1: User Configurable Jumper Option Table for the Roadrunner 75 board***

## ROADRUNNER 75 CONNECTORS

The following table provides a brief overview of the connectors on the Roadrunner 75 board.

| *Connector Number* | *Connector Name* | *Connector Type* | *Cable Description and How to Use* |
|---|---|---|---|
| J1 | 10/100 Base T Ethernet | Shielded RJ-45 | Install internal cable from Ethernet connector board (AM-368-20) |
| J2 | SCSI-2 Wide | 68-pin | Cable pin-1 down, use keyed cable |
| J4, J6 | Bank 0 | Memory SIMM Connectors for Memory Bank 0 | |
| J5, J7 | Bank 1 | Memory SIMM Connectors for Memory Bank 1 | |
| JP4 | LEVEL7 | 2-pin | Diagnostic use only. |
| P1 | XBUS | A/D | Cable pin-1 up, use keyed cable |
| P2 | XBUS | C/S | Cable pin-1 up, use keyed cable |
| P3 | Program | FOR FACTORY USE ONLY | |
| P4 | Power 4 | Keyed Molex connector for +5V and +12V | |
| P5 | Fan | Connector | Plug 12V fan in only. (+) goes down, toward memory SIMMs. No jumpers. |
| P6 | Ethernet LED Interface | 6-pin | Drives LEDs on Ethernet connector board (AM-368-20) |

***Table 4-2:Roadrunner 75 - Connector Description Table***

## ROADRUNNER 75 FLASH MEMORY BOOTING OPTION

The Roadrunner 75 may be equipped with 4MB of flash memory on the main CPU board. All Roadrunner 75s with flash memory that are shipped from the factory contain a bootable version of AMOS in the flash memory. If, for some reason, the computer cannot be booted from disk, it may still be bootable using the version of AMOS stored in flash memory. This may then be used to access and restore the disk to a bootable status.

For details of flash memory operation, see Appendix H. For details of the INIs included in the flash memory, see Appendix J.

# THE CMOS MENU

The Roadrunner 75 does not use boot ID switches; instead it has a CMOS configuration menu to let you choose primary and secondary boot devices, as well as set other system options, such as the system monitor file to use. The CMOS RAM is provided on the AM-319-20 board; it is battery backed up and write-protected for data integrity.

If you are upgrading from a Super Eagle or AM-6000 system, you are already familiar with the CMOS concept. However, the CMOS menu for the Roadrunner 75 is a new implementation, so please do not skip this section.

To change the CMOS configuration, you must have a terminal attached to port 0 on the AM-319-20 system board and configured for the baud rate specified in the CMOS setup. This terminal is referred to as the "boot terminal." If you do not know the CMOS terminal baud rate setting, see “Serial Port 0 Speed” in the CMOS Menu Option section below.

## Roadrunner 75 Initialization Routine

Before relying on the CMOS parameters, the Roadrunner boot code checks the validity of the CMOS contents by verifying the parameter checksum. If the checksum verifies, the system front panel displays "CS" while it verifies CMOS, and boots using the current CMOS parameters. If you want to change the CMOS parameters, press ESC when the "CS" displays (you have approximately three seconds).

If the CMOS checksum test fails, the front panel will blink "CE" for several seconds, then switch to "CC" while the boot code tests CMOS RAM to ensure that it is working. If the RAM test fails, the boot code displays "CF" on the front panel and the system halts. If this is the case, contact Alpha Micro's Technical Assistance Center.

The CMOS data for the Roadrunner 75 CPU board differs from any previous CMOS parameters you may have stored in your previous system configuration. This will initially result in a CMOS checksum failure when initially powering on the Roadrunner 75, resulting in a reload of the CMOS data with default settings. You will need to update these settings for your particular configuration.

## CMOS Menu Options

The CMOS setup procedure gives you many boot options. Among the CMOS menu options are:

- Setting the SCSI ID of the primary boot device
- Setting the SCSI ID of the alternate boot device
- The boot monitor and initialization file names. These files must be located in account [1,4] of the selected boot device.
- Selecting the network interface type

To enter CMOS Setup, first make sure no one else is using the computer. Then, press the system reset button. When the code "CS" appears on the front display panel, press ESC on the boot terminal to

interrupt the boot process and access the CMOS Configuration menu. You have approximately three seconds to press ESC. The CMOS menu looks like this:

```
                ALPHA MICROSYSTEMS
              CMOS Configuration Menu


        Primary boot device type....... SCSI Disk
        Primary boot device unit #..... 00

        Alternate boot device type..... Streamer
        Alternate boot device unit #... 03

        Boot monitor file name......... AMOS32.MON
        Boot initialization file name.. AMOS32.INI

        Network interface type......... TPI
        Serial port 0 speed............ 19200
        Display console boot messages.. Yes
        Memory in bank 0/1............. Auto /Auto

        Use [UP], [DOWN], or [TAB] keys to select an item.
        Use [LEFT] and [RIGHT] keys to change item.
                Press [ESCAPE] when done.
```

The above shows the default CMOS settings used when initializing the CMOS. As indicated on the screen, you use the ↑ and ↓ keys to select a parameter. To change a parameter, use the ← and → keys to cycle through its possible settings. The only exceptions are file names, which you type.

The CMOS menu fields are:

### Primary Boot Device Type

This parameter selects the type of device to boot from in the event that the attempt to boot from the alternate device fails or no alternate device is selected. Currently, SCSI and flash (on the Roadrunner 75 board) can be selected.

### Primary Boot Device Unit #

This parameter selects which primary drive number to boot from. Valid unit numbers for SCSI drives are 0-15. The setup routine will not allow you to select an invalid unit number.

### Alternate Boot Device Type

This parameter selects the type of device to attempt to boot from first, before defaulting to the primary boot device. Currently supported alternate boot devices are SCSI Disk, Streamer, Flash (on the optional AM-703 board), XMODEM, or None (boot from primary device only).

### Alternate Boot Device Unit #

This parameter selects which alternate device number to boot from. Valid unit numbers are 0-15. The setup routine will not allow you to select an invalid unit number. You should know how many devices you currently have on the system before you enter this number. If you select a number and the device is not found, it will go to the primary boot selection.

### Boot Monitor File Name

This parameter lets you change the name of the monitor file to be loaded during boot. Any valid file name, with an .MON extension, can be used (other extensions, such as .BAK, are also acceptable). The monitor file must exist, and reside in account [1,4] of the first logical disk of the selected boot device. This parameter is not used when booting from a tape device. You can use the backspace and the arrow keys to edit this field.

### Boot Initialization File Name

This parameter lets you change the name of the system initialization (INI) file to be used during boot. Any valid file name, with an .INI extension, can be used (other extensions, such as .BAK, are also acceptable). The INI file must exist, and reside in account [1,4] of the first logical disk of the selected boot device. You can use the backspace and the arrow keys to edit this field.

### Network Interface Type

This parameter specifies which Ethernet interface connector to use for the Ethernet port on the AM-319-20 board. There are two possible selections: AUI (DB-15), or TPI (RJ-45) 10BaseT. If you are using the high speed 100BaseT Ethernet port on the AM-176-10 board, it is not necessary to indicate it on the CMOS menu.

### Serial Port 0 Speed

By default, CMOS requires a port 0 terminal set to 19200 baud. You can change this to 1200, 9600, or 38400. The speed you set here should match the port 0 definition in the system initialization file. If the terminal's baud rate does not match this setting, you won't be able to re-enter the CMOS menu, since CMOS will not recognize it when you press ESC. You can, however, go into Self Test mode to match the port 0 terminal baud rate to the CMOS setting. Use the following procedure to set the port 0 baud rate to a known value:

1. Insure that your terminal is connected to port 0 of your system and set for one of the four supported baud rates -- 1200, 9600, 19200, or 38400.
2. Enter self-test by holding down the RESET button while turning AC power on the computer and then releasing the RESET button.
3. Observe the front panel two-digit status display. When **5b** is shown, tap the **<SPACE BAR>** repeatedly on the terminal connected to port 0 until the self-test header appears on your terminal. The port 0 baud rate in CMOS is now set to the same baud rate as your terminal.

### Display Console Boot Messages

When set to Yes, this option displays status messages on the operator terminal during booting. These messages are equivalent to each of the front panel status codes normally displayed during booting, and are normally only needed if you cannot see the status display. See Appendix I for a list of these messages.

### Memory in Bank 0/1

These parameters allow the memory size in both banks 0 and 1 to be reduced for troubleshooting purposes. The settings for these memory banks are as follows:

| **Bank 0** | / | **Bank 1** |
|---|---|---|
| Auto | | Auto |
| 32MB | | |
| 64MB | | |
| 128MB | | |
| 256MB | | |
| | | None |
| | | 32MB |
| | | 64MB |
| | | 128MB |
| | | 256MB |

Note that Bank 1 memory size cannot be greater than Bank 0 memory size.

When you are done making changes, press ESC. You will see a message at the bottom of the screen asking if you wish to save any changes made. Type **Y** to save the changes or **N** to abandon any changes made. After you enter your response, the system will boot using whatever parameters have been saved in the CMOS setup.

It's a good idea to write down your CMOS settings, once you have configured your system the way you want it. That way, if the CMOS battery needs replacing, you'll be able to easily input your existing CMOS data once the battery is replaced.

## Important Note

If you want to boot from a physical disk device other than device ID 0:, you should create a disk driver for the selected drive ID and MONGEN it into the monitor. ***You must do this if you want to be able to MONTST using your monitor.*** While a hardware reset will work if the monitor contains the generic SCZ7K.DVR, because it reads the drive ID from CMOS, MONTST does not look at the CMOS settings, and so will not know which drive to boot from unless the drive ID is embedded in the monitor.

## ETHERNET PORTS

Both the Roadrunner 75 and AM-319-20 boards contain Ethernet interfaces: the Roadrunner 75 has an RJ-45 10/100 Base T connector; the AM-319-20 has both a 15 pin AUI and 10BaseT connectors. For best Ethernet and system performance, we recommend you use the Ethernet port on the Roadrunner 75

board. The Roadrunner 75's high performance Ethernet port can communicate directly with system memory, which greatly increases its performance. You may use the Ethernet port on the AM-319-20 with its network driver (NDV) with the AlphaNET software.

By adding a commercially available transceiver, you can convert the 15-pin AUI port on the AM-319-20 to 10Base2 "thin" Ethernet operation.

Though you'll routinely use the Ethernet port on the Roadrunner 75, the two ports on the AM-319-20 provide you with built-in back-up Ethernet connections.

To use the Roadrunner 75's Ethernet port, you'll need Alpha Micro's networking software, AlphaTCP, which is included with AMOS 2.3A and later. The driver for the Roadrunner 75's Ethernet port is only TCP compatible; but ITC tunneling is supported.

You can use the AlphaNET software and an AlphaNET-compatible driver, AM319S.NDV, with the Roadrunner 75 by attaching your Ethernet connection to the Ethernet port on the AM-319-20 board. In most configurations, however, the Ethernet port attached to the Roadrunner 75 using AlphaTCP and the PCSLSI.LDV driver give better performance and are recommended.

For instructions on configuring AMOS to use the Roadrunner 75 Ethernet port, please see Chapter 5. Additional information on configuring your networking software and hardware is in the *AlphaTCP Administrator's Guide*, DSO-00187-00.

## AM-319-20 BOARD CONFIGURATION

The illustration below shows the AM-319-20 board configured as shipped by Alpha Microsystems. There is only one user-configurable jumper on this board, the JP7 Remote Reset jumper. All other jumpers should be left in their factory configured positions.

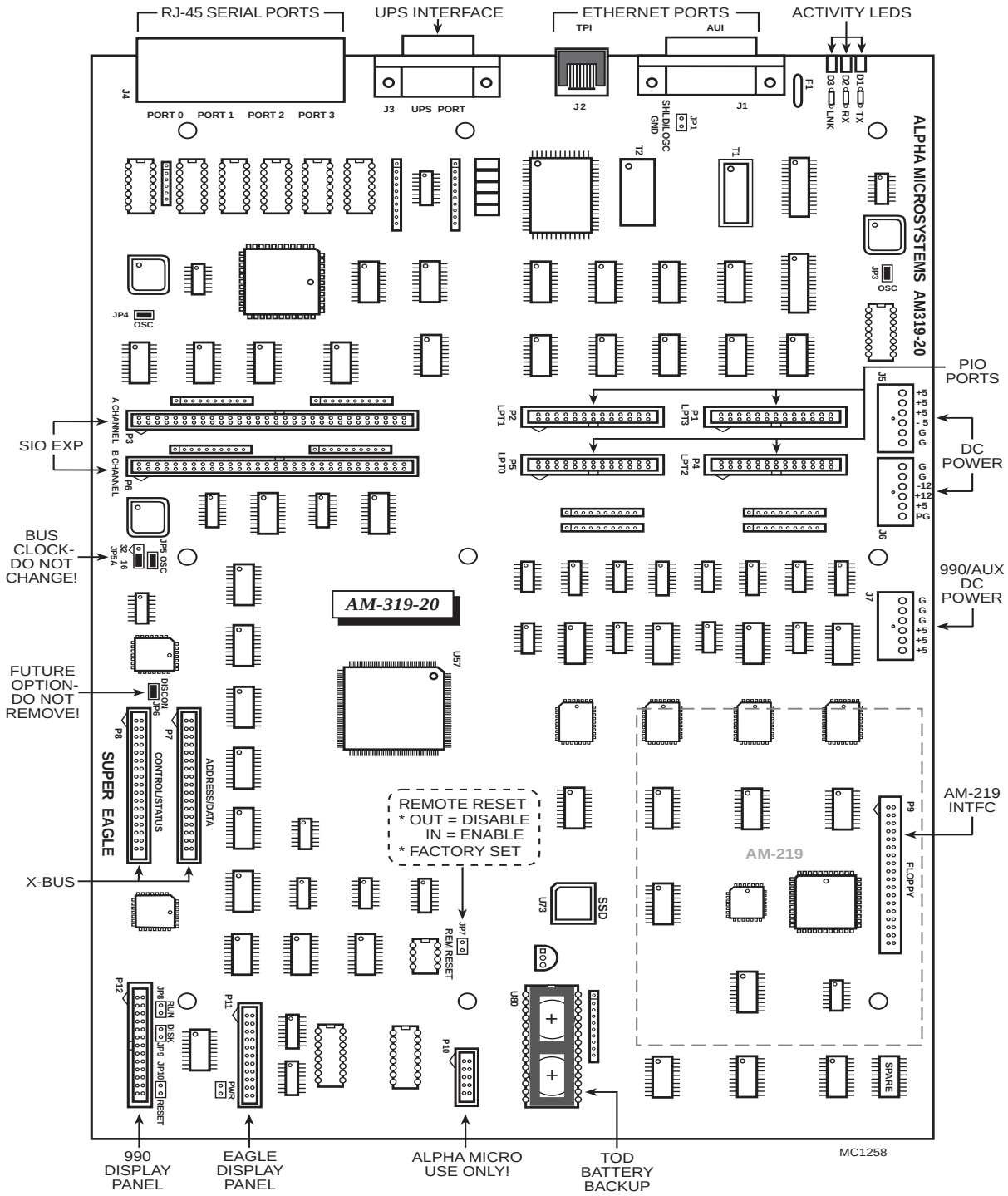


*Figure 4-2: AM-319-20 Board Configuration*

## REMOTE RESET CAPABILITY

The AM-319-20 board has an option to enable the computer's remote hardware reset. To enable remote reset, you must do two things:

1. Install the JP7 jumper, which is shown in the AM-319-20 illustration (Figure 4-2). The factory default is not installed.
2. Connect a push-button switch between pin-1 and pin-7 (signal ground) at the terminal end of the terminal cable attached to serial port 0 on the AM-319-20 board.

Once you've enabled remote reset, you can reset the computer by activating the push-button switch.

## INSTALLING THE SSD CHIP

If you are upgrading from an AM-4000 system, it is important to install the new SSD chip (PDB-00014-14), provided in the kit, at location U73 on the AM-319-20 board prior to installation.

Before installing the SSD chip on the AM-319-20 board, write the SSD number in a secure place for future reference. Install the new SSD chip at its clearly marked socket at U73, by inserting and pressing down gently on the chip. Make sure you align pin-1 on the SSD chip with the SSD socket.

SSD chip removal requires a special tool. See the illustration below for more information.

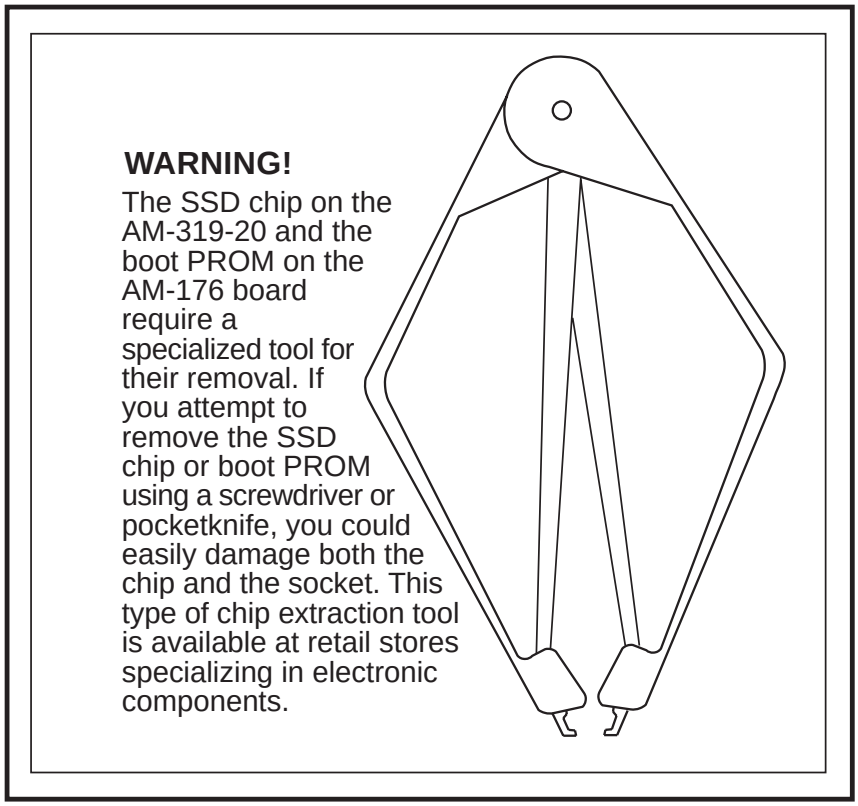


***Figure 4-3: SSD Chip Removal Tool***

## REPLACING THE TIME AND DATE BATTERY

When replacing the backup batteries, always be sure to power-down the system first! DO NOT replace the batteries with the power on! As always when opening your computer chassis, take proper precautions against electrostatic discharge, which can seriously damage system components.

The AM-319-20 board uses two 3-volt lithium batteries (BR-1225) to provide power to its time/date circuit. The batteries are no bigger than a dime (1.2 cm), and are secured side-by-side in a plastic holder at location U80, as shown in the board illustration.

The batteries need to be replaced when the status panel displays B1 or B0. You must replace ***both*** batteries at the same time. For battery replacement, please follow these steps:

Before turning off your computer, make a note of the current CMOS settings. Removing the batteries will erase all CMOS data.

1. Insert a knife with a thin blade (such as a small scribe or Xacto™ knife) from the top, down through the square hole between the right edge of the battery and the plastic holder's top piece. (The right side is the side toward the resistor pack at RN12.)
2. Gently pry the right side of the battery so it slides to the left and pushes against the left side spring contacts.
3. As you slide the battery to the left and it clears the plastic top hole, pry the right edge of the battery upward and out through the hole in the top. The battery will typically "pop" up and out.

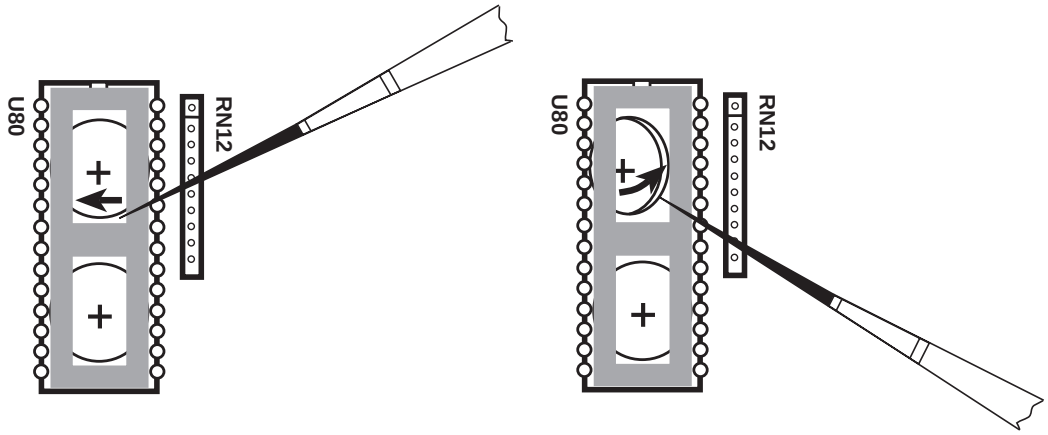


***Figure 4-4: AM-319-20 Backup Battery Removal***

4. Inspect the battery contacts and be sure they are clean before installing the new batteries. Use alcohol and a cotton swab to clean them, if necessary.
5. To install a new battery, insert the edge of the battery down through the square hole and under the left side of the plastic top. Be sure to install the new batteries with the (+) positive side up.
6. Use your finger to slide the battery to the left and down, until the right edge of the battery slips under the right side of the plastic top. Release the battery and it should spring to the right, securing itself under the holder's top piece.

## Restoring Your CMOS Settings

The AM-319-20's batteries also maintain the boot routine data stored in its on-board CMOS chip. Therefore, when you remove and replace the batteries, your CMOS settings will be lost. After you install the new batteries and turn system power on, you need to access the CMOS Configuration menu and restore your settings. Refer to the CMOS Configuration Menu section earlier in this chapter for detailed instructions.

If you do not use the CMOS configuration menu to restore your settings, the system will drop into a standard default boot routine: it will look first for a warm-boot streamer tape on SCSI device ID 3, then for AMOS32.MON and AMOS32.INI on SCSI disk drive 0.

Once the system is up and running, log to OPR: and enter the current time and date. Reboot the system to initialize the system up time.

## ON-BOARD SERIAL PORTS

The AM-319-20 includes four on-board ports. Port 0 is the system boot port. These are standard, fully functional ports, to which you can attach any supported terminal. When you define these terminals, use the A31810 interface driver, as described in Chapter 5.

## FRONT PANEL STATUS DISPLAY CODES

Your computer includes a two-digit front-panel status display, which can show various codes indicating the state of the system. The table starting on the next page shows all of the defined front panel status codes. Some of these codes will occur only while the computer is booting; others may occur any time the computer is running. If you have a problem with your computer, check the front panel; if there is a code displayed, look it up in this table to help diagnose the problem.

A separate set of codes appears on the front panel during the system self-test. Those codes are listed in the *System Self-test 3.0 User's Guide*, DSO-00157-00.

| Front Panel Status Code | Description |
|---|---|
| 0 | Computer is functioning normally. |
| 1 | Control has been passed from the Boot PROM to AMOS and AMOS is starting its initialization process. |
| 4 | System has gone under 100 queue blocks remaining. This code displays until replaced by another, even if the system now has over 100 queue blocks. At a convenient time, allocate more system queue blocks in the system initialization file. |
| 7 | LEVEL7 debugger is active. Will occur only when the LEVEL7 software is loaded in system memory. Refer to the LEVEL7 documentation for details. |
| Steady 8 | The computer's internal DC power supply has detected an internal power failure. Contact your VAR. |
| Flashing 8 | UPS low battery condition has existed for more than two minutes. The system has executed a shutdown procedure. Write-caching is deactivated on any disk drives which had it enabled. The system is now in a HALT condition until the batteries in the UPS are completely dead. Turn off system power! To reset this condition, you must get the UPS primary power back on line. Check the UPS input power breaker and be sure it's ON! The system must be rebooted with a hardware reset. |
| 9 | Memory parity error was encountered. |
| F | During booting, memory is being cleared and sized. |
| 10 | An interface driver (.IDV) defined in a TRMDEF statement in the system initialization file was not found in account [1,6] on first logical of the boot device. |
| 11 | A terminal driver (.TDV) defined in a TRMDEF statement in the system initialization file was not found in account [1,6] on the boot device. |
| 12 | AMOS system initialization (.INI) file not found in account [1,4] on the first logical of the boot device. |
| 1E | During booting, system was halted due to a bus time-out error. |
| 20 | The computer is beginning to execute the boot PROM. An error at this point indicates your computer has a faulty PROM or other hardware problem. Contact your VAR. |
| 21 | The computer is transferring the instructions from the PROM into its Random Access Memory (RAM). If an error occurs here, your computer might have a bad PROM or bad memory. Contact your VAR. |

***Table 4-3: Front Panel Status Codes***

| Front Panel Status Code | Description |
|---|---|
| 22 | The computer is generating a checksum of the instructions in Random Access Memory. If this calculated checksum does not match the checksum coded into the instructions themselves, you see a 2E error code. If an error occurs here, your computer might have a bad PROM or bad memory. Contact your VAR. |
| 24 | Reading the Master File Directory (MFD) from disk. An error at this point indicates disk problems in the alternate boot device. |
| 25 | Searching for the User File Directory (UFD) account [1,2] on the first logical of the alternate boot device. |
| 26 | Searching for a BADBLK.SYS file in account [1,2] on the first logical of the alternate boot device. Valid only on disk drives that use a BADBLK.SYS file. |
| 27 | Loading BADBLK.SYS on the alternate boot device. Valid only on disk drives that use a BADBLK.SYS file |
| 28 | Searching for account [1,4] on the first logical of the alternate boot device. An error at this point may indicate disk problems. Try reloading the latest version of the system software. |
| 29 | If you are ***booting from a tape device***, the computer is searching for a label block on the tape, as the alternate boot device. |
| 2A | Loading the AMOS monitor from the alternate boot device. If an error occurs at this point, try reloading the latest version of the system software. |
| 2b | Beginning to execute the AMOS monitor program from the alternate boot device. If an error occurs at this point, try reloading the latest version of the system software. |
| 2d | Bootup from the alternate boot device failed because of a time-out error. This may indicate a faulty memory or an addressing problem. |
| 2E | Bootup from the alternate boot device failed because of a bootstrap loader program checksum error. This may indicate a bad PROM or bad memory. |
| 2F | Bootup from the alternate boot device failed because of an invalid boot device selection. Access the CMOS setup routine by pressing Reset, then pressing the ESC key when the code "CS" appears on the front panel. Verify the device and unit number settings on the CMOS menu. |
| 33 | ***While booting:*** initializing the primary boot device. If the boot stops at this point, it may indicate a hardware problem with the primary boot device. When you are booting from a disk, this code may remain on the display for a short time after you've turned the power on, while the disk drive spins up to operating speed. |

***Front Panel Status Codes (continued)***

| Front Panel Status Code | Description |
|---|---|
| 34 | ***While booting:*** reading the Master File Directory (MFD) from the primary boot device. An error at this point indicates disk problems.<br><br>***During normal operation:*** unimplemented Integer instruction encountered. |
| 35 | Searching for the User File Directory (UFD) account [1,2] on first logical of the primary boot device. |
| 36 | Searching for a BADBLK.SYS file on the first logical of the primary boot device. Valid only on disk drives that use a BADBLK.SYS file. |
| 37 | Loading BADBLK.SYS on the first logical of the primary boot device. Valid only on disk drives that use a BADBLK.SYS file |
| 38 | Searching for account [1,4] on the first logical of the primary boot device. An error at this point may indicate disk problems. Try reloading the latest version of the system software. |
| 39 | If you are ***booting from the hard drive (DSK0)***, this code indicates the computer is looking for the system monitor file in [1,4] as the primary boot device. If this file is missing, reload the latest version of the system software. |
| 3A | Loading the AMOS monitor from the primary boot device. If an error occurs at this point, try reloading the latest version of the system software. |
| 3b | Beginning to execute the AMOS monitor from the primary boot device. If an error occurs at this point, try reloading the latest version of the system software. |
| 3F | Bootup failed because of an invalid primary boot device selection. Access the CMOS setup routine by pressing Reset , then pressing the ESC key when the code "CS" appears on the front panel. Verify the device and unit number settings on the CMOS menu. |
| 40 | UPS inverter on. Normal operation recovering from an AC power failure. Only displays if the UPS status cable is installed on the UPS port. |
| 41 | UPS is bypassed. System running without UPS battery protection. Please turn on UPS run switch. |
| 42 | UPS inverter on, AC power failure detected, and the system is running off batteries. This status is updated every second that the AC power is off.. |
| 43 | Not valid, system inoperative. |
| 44 | UPS is on, and batteries are low. Batteries are recharging, please check. |
| 45 | UPS is bypassed and batteries are low. |

***Front Panel Status Codes (continued)***

| Front Panel Status Code | Description |
|---|---|
| 46 | UPS inverter is running and a low battery condition exists. Only **2 minutes of power remaining!** System shutdown is imminent. |
| 47 | Not valid, system dead. |
| 48 | An internal fault has been detected in the UPS. |
| 49 | An internal fault has occurred in the UPS and it is in bypass. |
| 4A - 4E | Not valid. |
| 4F | UPS cable has been unplugged from UPS port. |
| 62 | Detected an AC power failure |
| 66 | AMOS initialization is complete and DSK0 is being mounted. |
| 88 | Trying to execute an unimplemented SVCA (Monitor) call. |
| 89 | Floating Point emulation |
| 95 | Logger CREATE error. |
| 96 | Logger CLOSE error. |
| 97 | Logger FILOTX error. |
| 98 | Logger OPENA error. |
| 99 | Logger semaphore not available. |
| B0 | CMOS batteries need to be replaced. Data that was stored in CMOS RAM is not guaranteed. |
| B1 | The battery voltage dropped temporarily (i.e., after replacing the batteries). The initial CMOS parameters are not guaranteed. Access the CMOS setup routine by pressing Reset, then pressing the ESC key when the code "CS" appears on the front panel. Re-enter CMOS settings. |
| C0 | Unimplemented Integer Instruction |
| CC | The computer is testing the CMOS RAM for proper operation after detecting a CMOS checksum error. |
| CE | CMOS parameter checksum error. This code will flash on the front panel for several seconds. |
| CF | CMOS RAM failure. The system is going into a halt state. Contact your dealer or the Alpha Micro Technical Assistance Center. |
| CS | Do you want to enter CMOS setup? You have three seconds to press the ESC key on the boot terminal, which must be set at 19200 baud. |

***Front Panel Status Codes (continued)***

| Front Panel Status Code | Description |
|---|---|
| D0 | Tried deleting all three valid timer chips and all failed. |
| EF | System has detected an attempt to write outside of the supervisor stack area. |
| F | On boot-up, memory is being cleared and sized. |
| F0 | Bus error was encountered. |
| F1 | Address error was encountered. |
| F2 | Illegal instruction was encountered. |
| F4 | CHK instruction. |
| F5 | TRAPV instruction. |
| F6 | Privilege violation. |
| F7 | TRACE return. |
| F8 | Coprocessor protocol violation. |
| F9 | EM1111. |
| FA | FPCP branch or set on unordered condition, or FPCP inexact result, or FPCP divide by zero, or FPCP underflow, or FPCP operand error, or FPCP overflow, or FPCP signaling NAN, or FPCP unimplemented data type. |

***Front Panel Status Codes (continued)***

## SERIAL UPS MONITORING

With an Alpha Micro UPS (Uninterruptible Power Source) and the related UPS Monitoring Software (Version 1.3(176) or later) installed, you can monitor the UPS from any terminal on the system. If any problem arises, you can check the front panel status code (see Table 4-3).

You can find information about the configuration and use of the UPS monitoring software in the *UPS Monitor Software User's Guide*, DSS-10394-00.

If you are using the Roadrunner 75's write buffering feature described in Appendix B, the system monitor has a feature you should be aware of. To help prevent possible data loss, the write buffer will be flushed and disabled if a low battery condition is detected by the system monitor via the AM-319-20's on-board UPS status port. However, this feature is not available when the Level 7 software is actively loaded in the system's initialization (INI) file.

# Chapter 5 - Beginning a Roadrunner 75 Upgrade

When you upgrade your computer to a Roadrunner 75, it's important that you perform the proper hardware and software steps in the correct order, taking all the necessary precautions to protect your data in case of a problem. Here is a brief summary of the steps you must follow to complete your upgrade:

1. Safeguard your data by performing a complete backup and preparing and testing a warm boot tape.
2. As necessary, update all circuit boards in the computer to meet the minimum revision requirements for the Roadrunner 75. Replace unsupported boards and peripherals.
3. Install the correct version of AMOS, following the instructions detailed in the appropriate *AMOS Release Notes*.
4. Copy your current monitor and system initialization files to some other file for backup purposes, such as AM6000.MON and AM6000.INI.
5. Use MONGEN to create a new monitor file, called AM7000.MON, for the AM176-10 board.
6. Use FIXLOG to create new disk drivers for any subsystem disks.
7. Create a new initialization file for the Roadrunner 75, called AM7000.INI.
8. If your computer is on a network, modify the network configuration file.
9. Backup DSK0: and prepare and test a warm boot tape.
10. Install the Roadrunner 75 hardware.
11. Turn the computer back on and perform self-test.
12. Set your CMOS Configuration options to match the new system hardware and software.
13. Boot up your system. Ensure that all peripherals are working correctly.
14. Copy your new monitor and system initialization files to AMOS32.MON and AMOS32.INI respectively.

The rest of this chapter describes steps 1 - 8, then tells you where to look in this manual for instructions on step 9. Steps 10 - 12 are covered in Chapter 6.

## ELECTRONIC EQUIPMENT HANDLING PRECAUTIONS

While your computer's hardware is exposed and the AC power cord is unplugged, the components are vulnerable to damage caused by static discharge. Your body and clothing are capable of storing an electrical charge that can damage or destroy unprotected electronic components. Before you handle any computer hardware, make certain your work area is properly protected against static discharge. There are a number of commercially available static protection devices, like the wrist strap shown in Chapter 3, designed specifically to protect your equipment from harmful static discharge.

# STEP 1 - PROTECTING YOUR DATA

### Perform a Complete Back Up

When doing a major upgrade to a computer, you want to be absolutely sure you have a recent and complete system backup. Although it is very unlikely that data stored on your hard disk drive would be corrupted when upgrading your computer, you should be prepared for anything. **Before you loosen the first screw or download any new software, make sure all your data is copied onto some form of backup media.** Make certain you are able to read the backed-up data; be absolutely sure it is both readable and restorable.

### Create a Warm Boot Tape

A warm boot tape allows you to boot the computer when you cannot do so from the hard disk drive. When doing a Roadrunner 75 upgrade, you'll be updating your system software, modifying the system initialization command file, and using the MONGEN program to embed a new driver in your AMOS monitor. A mistake during any of these operations could result in a computer that won't boot. If you have a properly prepared warm boot tape, you will be able to restore the computer and correct the problem. Without such a tape, it is extremely difficult to access the computer and correct the problem. See the WRMGEN sheet in the *Systems Command Reference Manual* for information on how to create a warm boot monitor and a bootable tape.

# STEP 2 - UPGRADE CIRCUIT BOARDS AND PERIPHERALS

Chapter 2 contains lists of Alpha Micro hardware which is and isn’t supported with the Roadrunner 75. Make sure the boards which will stay in your computer after the upgrade are updated to at least the minimum necessary revision levels.

For peripherals which need to be replaced, we recommend you install the new peripherals before beginning the Roadrunner 75 upgrade. This lets you make sure the new equipment is working properly before you add the extra variables of new software and a new CPU.

# STEP 3 - INSTALL THE CORRECT VERSION OF AMOS

The Roadrunner 75 is compatible only with AMOS 2.3A (6/00 patch release) and later. Make sure your computer is using a version of AMOS which will work with your new hardware. If you do need to install a new version of AMOS, do it now, on your existing CPU, before upgrading your hardware. Follow the instructions in the *AMOS Release Notes* and make sure all parts of your system are working properly using the new software before you continue.

To insure all aspects of your system are running properly under the new operating system, we strongly recommend that you wait to perform the hardware upgrade and run your system as usual for a few days.

## STEP 4 - CREATE A NEW SYSTEM MONITOR

Because of the Roadrunner 75's CMOS configuration, you can give the system monitor file any name you want. In this step, you use MONGEN to create a monitor called AM7000.MON, containing the SCZ7K disk driver. For example:

```
LOG SYS: RETURN
MONGEN RETURN

Input monitor name: AMOS.MON RETURN
New disk driver: SCZ7K.DVR RETURN
New language definition table name: ENGLSH RETURN
New monitor name: AM7000.MON RETURN

SAVE AM7000.MON RETURN
```

This is only an example; be sure to choose the correct language definition table for your installation. All other entries shown are correct for the Roadrunner 75.

If the disk drive you will boot form is not at SCSI ID 0, use FIXLOG to create a disk driver for the correct SCSI ID and use that driver during MONGEN instead of the generic SCZ7K.DVR. Otherwise, you will not be able to MONTST using the new monitor.

## STEP 5 - CREATE A NEW SYSTEM INITIALIZATION FILE

You need to make several changes to your system initialization (INI) file so the computer will boot correctly after you've installed the Roadrunner 75 hardware. As with the monitor file, the CMOS configuration lets you call this file anything you want (with an .INI extension). The steps below create an initialization file called AM7000.INI.

These instructions have you make a copy of your system initialization file (AMOS32.INI), then modify the copy. Never modify your system INI file directly, as mistakes in the INI file could keep your computer from booting!

1. Copy your system initialization file to AM7000.INI. Type:

   ```
   LOG SYS: ENTER
   COPY AM7000.INI=AMOS32.INI ENTER
   ```

   Edit the AM7000.INI file.

2. If you are upgrading from an AM-4000, update the TRMDEF statements for the ports which will now be attached to the AM-319-20 board. It's especially important to change port 0 (the boot terminal). You must change the interface driver name to A31810, the driver used by the ports on the AM-319-20. For example:

   ```
   TRMDEF TRMN,A31810=0:19200,AM62A,100,100,100
   ```

   If you are upgrading from a Super Eagle or AM-6000, these terminal definitions should already be correct; check to make sure.

3. The high performance features of the Roadrunner 75 board require more queue blocks. To determine your new queue block requirement, use the following formula:

   **New Queue Block Requirement = Old Queue Blocks + (13 X Number of Jobs)**

For example, if the QUEUE statement in your system initialization command file is currently set to 200 and the JOBS statement is set to 50, the resulting formula would look like this:

**New Queue Block Requirement = 200 + (13 x 50)**

This example results in a setting of 850 queue blocks. However, we strongly recommend that you use a minimum a 4,500 queue blocks, even if the formula results in a lower number.

4. Since you will be booting from a SCSI disk drive connected to the Roadrunner 75 board, you need to define the SCSI dispatcher for the Roadrunner 75 (described in Chapter 3) in the system initialization command file. Add these commands to the INI file **after** the JOBALC statements, but **before** the first DEVTBL statement:

```
PCI7K.LIT
SCZDSP SCZ7K.SYS/EW:0/ET/EU
```

For example:

```
:T
JOBS 1
JOBALC JOB1
;
TRMDEF TERM1,A31810=0:19200,AM62A,100,100,100,EDITOR=15
VER
PCI7K.LIT
SCZDSP SCZ7K.SYS/EW:0/ET/EU
;
DEVTBL DSK1,DSK2
```

The SCZ7K dispatcher supports several option switches, as shown in the following table:

| Switch | Description |
|---|---|
| /ET | Enable active negation of host CPU SCSI port |
| /EU | Enable ultra wide SCSI mode for maximum wide SCSI performance. Use this switch only when using the /ET and /EW switches. |
| /EW<br>/EW:{id#} | Enable Wide SCSI negotiation for all devices<br>Enable Wide SCSI negotiation for SCSI device ***ID#*** |
| /NQ<br>/NQ:{id#} | Disable Command Queuing for all devices<br>Disable Command Queuing for SCSI device ***ID#*** |
| /NS<br>/NS:{id#} | Disable Synchronous Negotiation for all devices<br>Disable Synchronous Negotiation for SCSI device ***ID#*** |
| /NP | Disable Parity Checking (Parity still generated) on all devices |

***Table 5-1: Dispatcher Switch Table***

The most common of these switches is /EW, to enable Wide SCSI operation when using the optional Wide SCSI bus. For example, if you have the Wide SCSI cabling option installed and a Wide SCSI disk drive at ID 0 of the wide bus, and non-wide devices at other IDs, enter this statement to enable Wide SCSI operation for just that drive:

```
SCZDSP SCZ7K/EW:0
```

If you have both Wide and narrow SCSI devices attached to the wide bus, enable Wide SCSI operation only for the wide devices. Use /EW without a device ID (to enable wide operation for the entire bus) only if all devices on the bus, both disk and tape drives, are Wide SCSI devices.

Do not use the /EW switch with the narrow SCSI bus, even if you have Wide SCSI devices attached to the bus using the appropriate adapters. Also, when using the /ET switch, make sure you do NOT attach or remove SCSI peripherals to the SCSI bus with power on - this can damage the SCSI bus circuitry.

5. If you are upgrading from an AM-4000, modify the DEVTBL to identify the printer port you will be using:

   ```
   DEVTBL /SEP0
   ```

   If you are installing multiple printers, add the following DEVTBL statement:

   ```
   DEVTBL /SEP0,SEP1,SEP2,SEP3
   ```

   To load SEP.DVR into system memory, add the following statement to the SYSTEM area:

   ```
   SYSTEM DVR:SEP.DVR
   ```

6. In the system area of AM7000.INI, add a line to load the network driver for the appropriate Ethernet interface.

   If you are using the 10/100 Base T Ethernet port on the Roadrunner 75 board, which we recommend, use this statement:

   ```
   SYSTEM DVR:PCILSI.LDV/N/H/T:100/R:100     ;100BaseT
   or
   SYSTEM DVR:PCILSI.LDV/N/T:100/R:100       ;10BaseT
   ```

   If you are using the AUI or TPI port on the AM-319-20, use this statement:

   ```
   SYSTEM DVR:AM319S.LDV/N
   ```

The Roadrunner 75's high performance SCSI port supports write buffering for SCSI hard disk drives. If you want to use this feature, please read the information in Appendix B before continuing. You may need to make additional changes to your initialization file.

7. Save and exit from AM7000.INI after making your changes.

For sample INI files, see Appendix J.

## STEP 6 - CREATE NEW SUBSYSTEM DISK DRIVERS

In step 5, you created a new disk driver for your DSK device and embedded it in a new system monitor. If you have any non-DSK disk devices (subsystem disks), you also need to create new drivers for them.

To create the new drivers, use the FIXLOG command. See the FIXLOG sheet in the *AMOS System Commands Reference Manual* for instructions.

The Roadrunner 75's high performance SCSI port supports write buffering for SCSI hard disk drives. If you want to use this feature, please read the information in Appendix B before continuing. It will affect the choices you make while using FIXLOG.

After creating the new disk drivers, be sure to save them to disk.

## STEP 7 - NETWORK CONFIGURATION

In step 6, you changed a SYSTEM statement in the AM7000.INI file to load the correct network interface driver for the Roadrunner 75 Ethernet port you will be using. You must make the same change to the AlphaTCP configuration file, CONFIG. To do this:

1. Log to TCP:.
2. Edit the CONFIG. File.
3. Change the IFCONFIG statement to PCILSI.LDV if you will be using the Ethernet port on the Roadrunner 75, as recommended. If for some reason you will use the port on the AM-319-20, this statement should specify AM319S.LDV.
4. Save the file after making these changes.

## STEP 8 - PROTECT YOUR DATA AGAIN

Now that you've installed a new operating system, you should make a complete backup of DSK0:, and create a new warm boot tape and/or bootable floppy disk. That way, in the unlikely event that you do have to warm boot and restore your disk drive, you won't have to repeat the installation of the new operating system.

If you have an available logical disk device, you can copy DSK0: to it rather than making a backup tape.

## STEP 9 - INSTALL THE ROADRUNNER 75 HARDWARE

Obviously, the hardware installation procedure differs depending on the chassis and the type of system you are upgrading from: AM-4000, Super Eagle, or AM-6000. Each chassis/system type has its own set of instructions. Please turn to the correct appendix for your upgrade:

- AM-4000M or AM-4000 VME 6-slot in a pedestal chassis — Appendix C
- AM-4000 VME 10-slot or 21-slot in a rack mount chassis — Appendix D
- AM-4000M or AM-4000-06 VME in an AM-990 chassis — Appendix E
- AM-4000-10 VME in an AM-990 double-wide (jumbo) chassis — Appendix E
- Super Eagle or AM-6000 in deskside chassis — Appendix F
- Super Eagle or AM-6000 in an AM-990 chassis — Appendix G
- Super Eagle or AM-6000 in an AM-990 double-wide (jumbo) chassis — Appendix G

# Chapter 6 - Testing the New System

After you've installed the new hardware, you need to test the system to make sure it works properly in its new configuration. To do so:

1. Run self-test.
2. If the system passes the self-test, access the CMOS Configuration menu to define your configuration, then boot the computer. Make sure it boots correctly with your new configuration.
3. Rename your new system monitor and initialization files.
4. Back up the entire system and make a new warm boot tape.

The sections below give more information on each step.

## RUNNING A SELF-TEST

Once you have completed the hardware installation, run the Self Test program to make sure each subsystem is functional. The self test diagnostics are incorporated into the boot PROMs on the Roadrunner 75. Refer to the *System Self Test User's Guide,* DSO-00157-00, for more information.

To begin the self-test procedure, hold the reset button and turn on the computer. When the front panel displays "56", press [SPACE] on the boot terminal. The CPU will output the results of the self-test to that terminal.

If any problem arises, contact your dealer or the Alpha Micro Technical Assistance Center.

## SET YOUR CMOS CONFIGURATION AND BOOT

Once you have completed the self test, press the reset button and access the CMOS Configuration menu, as described in Chapter 4. After setting the correct monitor and initialization file names (AM7000.MON and AM7000.INI), save your configuration and the system will reboot itself.

As the computer boots, watch the boot terminal for error messages. After the computer finishes booting, at the AMOS prompt, type:

**SYSTAT** [RETURN]

Check the system status information displayed by the SYSTAT program and insure all disks are accessible and all jobs are up and running—terminals, printers, task manager, network jobs, etc.

To check on the status of all jobs, we recommend that you type:

**STAT** [RETURN]

## RENAMING THE SYSTEM MONITOR AND INITIALIZATION FILES

Once the system has passed the self-test and you have made sure that all jobs are up and running:

1. Make archive copies of your previous monitor and initialization files. For example:

```
LOG SYS:
COPY OLDMON.MON=AMOS32.MON
COPY OLDINI.INI=AMOS32.INI
```

2. Rename the AM7000.MON and AM7000.INI files to AMOS32.MON and AMOS32.INI:

```
COPY AMOS32.MON=AM7000.MON
COPY AMOS32.INI=AM7000.INI
```

3. Access the CMOS Configuration menu and change its settings to reflect the new monitor and initialization file names. See Chapter 4 for a description of CMOS Configuration.

## BACK UP AND MAKE A NEW WARM BOOT TAPE

Now that you've finished the upgrade installation, you need to safeguard your data in the new configuration. Use your normal backup procedure to make and verify a complete system backup, as discussed in Chapter 5. Then, create and test a new warm boot tape (and/or bootable diskette) which reflects the new system configuration.

If you do not back up your system and make a good warm boot tape, you risk losing your data and/or having to repeat large portions of the upgrade procedure!

## ADDITIONAL DOCUMENTATION

For additional hardware information, refer to the following:

- *System Self Test User's Guide*, DSO-00157-00.
- *Alpha Micro Installation and Planning Guide*, DSM-00034-00.

For additional software information, refer to the following:

- *AMOS System Operator's Guide*, DSM-00001-03.
- *AMOS System Commands Reference Manual*, DSM-00043-04.
- The *Release Notes* for your version of AMOS

# Appendix A - SCSI Termination

## SCSI TERMINATION USING EXTERNAL TERMINATOR OPTION

The preferred method of terminating the SCSI bus in an AMOS based computer is the installation of an external terminator. In April 1993, the external SCSI bus terminator became standard on all AMOS computers. Using an external terminator makes installing an add-on subsystem (like a portable CD-ROM drive) easier, eliminating the need to remove terminators from a SCSI device located in the host computer. In the Roadrunner 75, the external terminator ***must be*** an "active" terminator. Do not continue to use a passive terminator from your earlier system after you upgrade to the Roadrunner 75.

- If you are connecting your Roadrunner 75 to an existing narrow SCSI bus, you must order the Wide SCSI Host Adapter kit, part number PDB-00440-94. This kit includes a narrow SCSI active terminator for use in properly terminating the narrow SCSI bus.

- If you are upgrading an existing narrow SCSI bus to a wide configuration, you must order the appropriate Wide SCSI Bus Kit for your particular chassis. A wide SCSI active terminator is included with each kit.

- If you already have a wide SCSI bus in your system, simply continue to use the existing wide SCSI terminator already present in your system.

The Roadrunner 75 board is sensitive to incorrect SCSI bus termination. If you are using the external terminator and one of the SCSI devices inside the computer also has its terminators installed, you will experience problems.

The SCSI bus must be terminated at each end of the cable. The Roadrunner 75 terminates one end of the bus. The other end must be terminated by an active style external terminator.

To use the external terminator, make sure none of the SCSI peripherals inside the computer are terminated. The termination power for the SCSI bus is provided by the Roadrunner 75 board.

The wide SCSI external terminator is shown in Figure A-1:

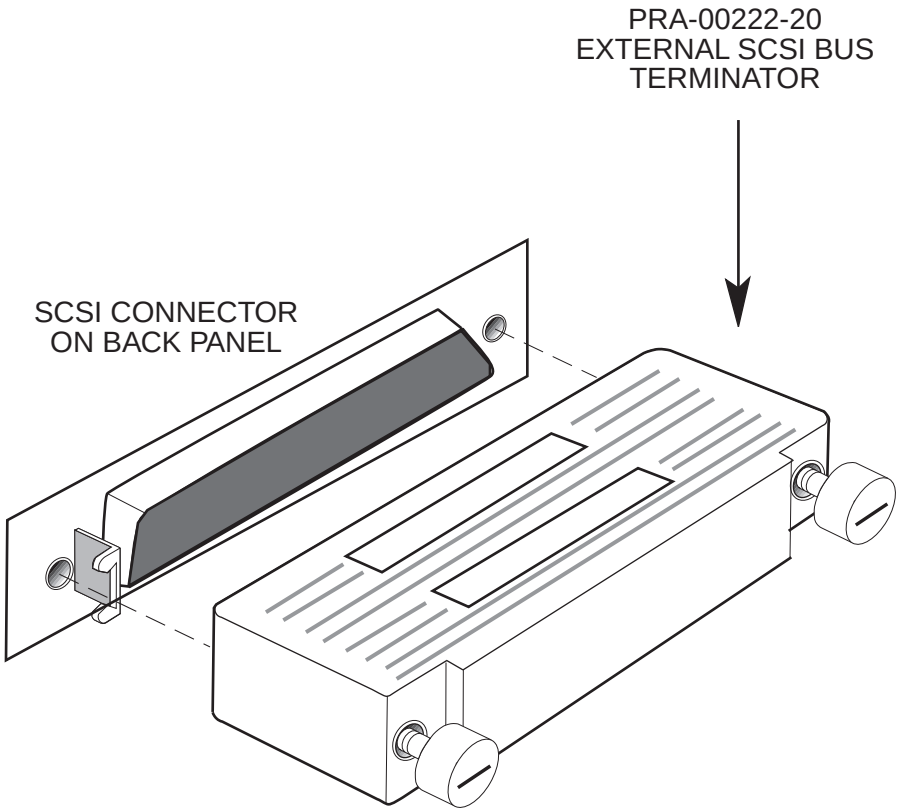


***Figure A-1: Active External Terminator Installation***

Figure A-1 shows an extended active external wide SCSI connector and thumbscrews for holding the terminator in place. This configuration is used on almost all of Alpha Micro's currently available product. The terminator is installed by sliding it over the connector and fastening the thumbscrews to the standoffs in the back panel.

## ATTACHING EXTERNAL DEVICES

To attach an external SCSI device, you must remove the terminator from the external SCSI port. However, you ***must*** make sure the SCSI bus is still terminated at both ends. To do so, install the external active terminator in the unused SCSI I/O port of the external SCSI device. You must also make sure that the overall system SCSI cable lengths do not exceed the maximum length specification for the SCSI bus after you add the external cable. A SCSI repeater (AM-441) may be required

Attaching an external narrow SCSI device, such as a CD-ROM drive, to a system using the Wide SCSI bus is a special case. You must make sure all 16 lines of the Wide SCSI bus are properly terminated. To do so:

1. Use an external wide to narrow SCSI cable which actively terminates the “high” nine lines of the Wide SCSI bus. Alpha Micro offers this cable in both three foot and six foot lengths (PDB-00440-80 and PDB-00440-81).
2. Plug a narrow active external terminator (PRA-00222-21) into the unused SCSI I/O port of the external device. This terminates the “low” half of the SCSI bus.

Notice that, in this configuration, the Wide SCSI active external terminator (PRA-00222-20), which is normally plugged into the external SCSI port, is not used.

## TERMINATOR POWER

For information on how to configure terminator power, see the following documents:

- *SCSI Disk Drives Installation Instructions*, PDI-00436-20, revision A12 or later.
- *AM-625/626/627 SCSI 1/4" Streaming Tape Drive Installation Instructions*, PDI-00625-00, revision A05 or later.
- *AM-647 DAT Tape Drive Installation Instructions*, PDI-00647-00, revision A02 or later.
- The configuration document accompanying your disk drive.

# Appendix B - Read-Ahead and Write Buffering

## INTRODUCTION

Earlier AMOS systems achieved high levels of performance by using an intelligent disk controller (such as the AM-520) to offload a large portion of the CPU overhead associated with disk access. A benefit of this offloading is that extra cycles are available on the controller to perform functions such as read-ahead and write buffering. Both of these schemes were used by the AM-520 firmware, but cannot be used on other non-intelligent interfaces such as the Alpha Micro SASI interface because the main processor running AMOS has to control the SASI interface, stealing CPU cycles away from other resources, such as the terminal service system and user jobs.

The Roadrunner 75 board uses a programmable RISC DMA controller for SCSI bus communications and for data transfer to and from the Roadrunner 75's SCSI bus. The 68060 CPU is only involved with setup before and cleanup after a SCSI command is sent to a device—the rest of the command, including data transfer, is handled by the RISC processor.

Having the RISC processor take care of these details allows both read-ahead and write buffering without the need for a separate controller. Also, fast SCSI-2 disk drives will give better performance than an AM-520 using ESDI drives for the following reasons:

- Physically, SCSI-2 drives are faster than all ESDI drives. They spin the platters twice as fast (reducing latency) and have significantly faster seek times.
- Data transfer rates are higher with fast SCSI-2 drives. ESDI drives have a maximum transfer rate of 2.25MB/s, whereas fast SCSI-2 drives transfer data at 10MB/s (or around 4 times faster). Wide SCSI has a maximum transfer rate of 20MB/s.
- The data transfer path is much faster with the RISC SCSI-2 controller. It is able to read from or write to system memory 32 bits at a time, taking 60ns per read or write. The AM-520 transfers data 16 bits at a time, taking 210ns per 16-bit transfer (or 420ns per 32-bit transfer).

## READ-AHEAD

The Roadrunner 75's SCSI disk driver, SCZ7K.DVR, is able to perform read-ahead directly into the AMOS (DCACHE) disk cache. When any program attempts to read a physical block from a disk, the SCZ7K driver will also read up to an additional seven sequential blocks from the disk drive and store these read-ahead blocks in the cache.

This read-ahead scheme works very well when jobs on the system are doing a large number of sequential reads. For example, data base searches and programs like REDALL may execute much faster because the data they require is already in memory and only has to be transferred from the cache into the user partition.

Programs that do significant random disk access (such as RNDRED) tend to slow down with this read-ahead scheme. Most of the slowdown is caused by "thrashing" of the disk cache, where cache entries that will be used again are removed from the cache due to the allocation requirements of the read-ahead blocks (which typically are never used). The actual data transfer overhead is very little, as most SCSI disk drives (especially fast SCSI-2 drives) have a track cache built into the drive allowing both the target and read-ahead blocks to be transferred over the SCSI cable without delay.

## Controlling Read-Ahead

For read-ahead to occur on the Roadrunner 75, both the AMOS disk cache (DCACHE.SYS) and the full SCSI dispatcher (SCZ7K.SYS) must be installed. The number of read-ahead blocks to be transferred into cache on every physical disk read is contained in the disk driver. This can be set when using the FIXLOG program to generate a disk driver with the appropriate read-ahead blocking factor.

When you use FIXLOG to create a driver for the Roadrunner 75 board, you are asked to specify the number of read-ahead blocks. For example, type:

```
FIXLOG RETURN
FIXLOG.LIT Version x.x(xxx)

1. Change the number of logicals.
2. Create a sub-system driver.

Enter choice: 2 RETURN

Enter name of generic driver to be used: SCZ7K RETURN
Enter number of logical units per physical unit: 10 RETURN
Enter SCSI id (0-6): 0 RETURN
Enter number of read-ahead blocks (0-7): 5 RETURN
Enter new driver name: DSK RETURN
New driver is now in memory.
```

To save the driver you have created, type:

```
SAVE DSK.DVR RETURN
```

If you wish to disable or change the number of read-ahead blocks, simply use FIXLOG to generate a new disk driver. If the disk driver is for the DSK: device, don't forget to use MONGEN and embed the new driver into the system monitor.

The generic Roadrunner 75 SCSI disk driver (SCZ7K.DVR) is set up for seven read-ahead blocks.

## WRITE BUFFERING

AMOS (and therefore every application written for AMOS) understands only 512-byte disk blocks. Therefore, when a disk write request is made by a program, a single block transfer is made to the disk drive. If the program then writes the next sequential block, the system must wait the latency time of the drive (i.e., the time it takes the drive to complete one revolution) before the next block can be written. Latency, even on fast SCSI-2 drives, is around 7ms.

Write buffering can speed up the write process. When write buffering is enabled, all writes to the SCSI disk are first transferred into a buffer. If the write buffer becomes at least half full, or around three quarters of a second passes with no reads, or if a preset "guaranteed flush" time-out occurs, the SCZ7K.DVR disk driver will begin scanning through the write buffer, finding blocks that need to be written out to the drive. The algorithm used to flush blocks out to the drive is able to find up to eight consecutive blocks and write them to the disk drive as a single write command, therefore dramatically improving system performance.

Another benefit of write buffering is it tends to eliminate duplicate disk writes, such as bitmap updates during operations such as copying files and tape restores, and prevents head thrashing when reading through random access data files and writing a sequential file out to the disk (as most report generation programs do).

## Potential Pitfalls

Obviously, there can be problems with write buffering, especially if the system either crashes or is powered off while writes are pending in the write buffer. If that happens, all pending writes are lost. Though this sounds like a major problem, it can also happen if write buffering is not enabled. However, write buffering increases the number of writes at risk. The primary write buffering risks are an errant software operation or a hardware failure that causes a system crash.

To help reduce the possibility of data loss, certain safeguards have been put in place. Writes are not buffered indefinitely; they are performed whenever the device is not performing reads. Even if the drive is busy with read requests, the buffer is still periodically flushed, based on a user definable "absolute flush time." In addition, if you have a UPS installed and connected to the AM-319-20's UPS status port, and you experience a power failure and the UPS status port senses a low battery condition, AMOS will flush and disable the write buffer in preparation for a system shutdown. Also, the MONTST command automatically flushes the write buffer.

Therefore, you must weigh the potential for data loss (which is always there) versus the dramatic performance increase seen when using write buffering. If you are worried about the reliability of write buffering, it may be worth keeping in mind that the AM-520 disk controller has always used write buffering on a track-by-track basis (however, not quite as efficiently as the Roadrunner 75 write buffering scheme). The SMARTDRV program that comes with MS-DOS does write buffering (you may have noticed the "Waiting for system shutdown" message when rebooting a PC with CTRL-ALT-DELETE) and UNIX-based computers have always done it.

## Setting Up Write Buffering

To enable write buffering, you must be using the full SCSI dispatcher (SCZ7K.SYS). Enable write buffering by adding parameters to the SYSTEM statement used to load the SCSI disk driver into system memory. Append "/N" followed by the buffer size and flush period enables write buffering for that device. The syntax is:

```
SYSTEM DVR:dev/N buffer-size flush-period
```

For example:

```
SYSTEM DVR:DSK/N 200K 60
```

The ***buffer-size*** is the size of the write buffer (you specify the size in Kilobytes). We advise a buffer size of 100K to 200K.

The ***flush-period*** is the maximum number of seconds data may be left in the write buffer without being written to the disk. For example, if you specify 30, you will know that after 30 seconds any pending writes will be written to the disk. This is true even if the disk is constantly busy servicing reads.

One SYSTEM command is required for each different SCSI disk driver present in the system. For example, if you have two 1.2GB SCSI-2 drives named DSK0-36 and DSK37-73 and one 540MB SCSI-2 drive named SUB0-17, you need one SYSTEM command for the DSK device (although it's really two physical drives) and one SYSTEM command for the SUB device.

When specifying write buffering for a device, two files are placed into system memory: .DVR (loaded from disk) and .WRC (directly created in system memory), which are the driver and cache buffer. This is true for all SCSI disk devices except the DSK device. For the DSK device, the file DSK.DVR does not need to be created because it is already loaded into the system monitor. Therefore, for the DSK device, only the file DSK.WRC will be created in system memory.

In the three-drive example mentioned earlier, the added SYSTEM commands would look like this:

```
SYSTEM DVR:DSK/N 200K 60  ;Driver in AMOS will create DSK.WRC
SYSTEM DVR:SUB/N 200K 60  ;Load SUB.DVR and create SUB.WRC
```

This would set up 200K of write buffering for the DSK devices and 200K of write buffering for the SUB device. All three drives would have their write buffers flushed every minute (or sooner if the drives are not busy with read requests).

## FINAL NOTES

Both read-ahead and write buffering schemes used on the Roadrunner 75 board dramatically improve system performance in our lab tests. Both schemes are fine-tuned for the 68060 processor and RISC SCSI controller and do not take cycles away from AMOS like other commercially available disk optimization software.

Although our lab tests attempt to simulate the "real world" of user applications, they probably use the resources of the Roadrunner 75 CPU and SCSI subsystem differently than your application does; therefore we highly recommend you experiment with cache and write buffer sizes, read-ahead blocks, and flush periods on an installed system to find the best possible combination for that system.

# Appendix C - AM-4000 Pedestal Chassis Upgrade

In this upgrade the Roadrunner 75 and the AM-319-20 boards functionally replace the AM-190 board. This upgrade procedure involves the removal of the old CPU and the installation of two new boards and a new extended rear panel. The following instructions walk you through this process.

## PREPARING FOR THE UPGRADE

Before embarking on this upgrade, please ensure you have completed all of the steps in Chapter 5, "Beginning a Roadrunner 75 Upgrade." Do not begin the hardware installation until you've performed all of the necessary preliminary processes.

While your computer's hardware is exposed and the AC power cord is unplugged, the components are vulnerable to damage caused by static discharge. Before you handle any computer hardware, make certain your work area is properly protected against static discharge.

## ACCESSING YOUR HARDWARE

1. Power down your computer and remove all cables from the back panel, including the power cord.
2. Lay the computer on its side with the bezel facing away from you. We recommend that you place the chassis on a padded work surface.
3. Unscrew the feet off the pedestal chassis and set them aside; or let them hang over the edge of a table.
4. Remove the cover, as follows:
    - Looking at the computer from the back, remove the three screws on the right side of the cabinet that hold the top cover to the chassis.
    - Remove the top three screws on the left side of the cabinet. Two of these screws are attached to the computer's mounting feet.
    - Remove the small screw near the center top of the back panel, just to the right of the chassis slot marked E.
    - Lift the cover slightly and slide it off toward you. Remove it and set it aside.

## Removing the Old I/O Panel and the AM-190 Board

1. Unplug the 60-pin I/O cable from the CPU board.
2. Remove the four hex standoffs that retain the CPU board's port 0 and port 1 connectors.
3. Remove all the screws from the rear panel.

4. You should be able to separate the rear panel from the chassis by sliding it back and laying it down flat. Remove any I/O paddle boards and the external SCSI cable attached to the rear panel.
5. Disconnect any remaining cables connected to the CPU.
6. Remove the AM-190 board by sliding it out the rear of the card cage.
7. If you have an AM-219 floppy controller board, remove it from the AM-190 board. Insure you save the two standoffs that attach the AM-219 to the AM-190.

## Removing Obsolete Hardware

1. Unplug the power supply harness.
2. Remove the single hex nut attaching the power supply deck plate to the chassis (if applicable).
3. Remove power supply and deck plate (if applicable) from the chassis.
4. Remove all ESDI drives, cables and controllers.

## INSTALLING THE AM-319-20 BOARD

Once you've removed the old CPU board:

1. Install the new SSD chip, included in your upgrade kit, at U73 on the AM-319-20. This 28-pin PLCC socket is clearly marked.
2. If you have an AM-219 floppy controller board, refer to PDI-00219-00 (Rev. A01 or later), for installation instructions. Follow the directions for attaching the AM-219 to an AM-319-20 in an Eagle 550.
3. Align the AM-319-20 board with the bottom nylon card guide and insert it gently into the bottom slot of the chassis.
4. Reroute and plug the 26-pin panel display cable into the P12 connector on the AM-319-20 board. Make sure the red stripe on the cable aligns with pin-1 on the connector.
5. The kit includes two X-bus cables, which will be labeled as A/D and C/S.

Your kit provides labels for these two cables. Label both ends of the connectors before attaching them to the AM-319-20 board. Once the two cables are plugged into the AM-319-20, and you have slid the Roadrunner 75 board on its mounting plate over it, you will not be able to differentiate between them since you must fold and tuck them in.

Insure the red stripe on each cable lines up with pin-1 on each connector. Pin-1 is oriented toward the rear of the chassis. Both cables, when properly oriented, will exit the shrouded connector toward the center of the AM-319-20 board. Install as follows:

- A/D bus cable connects at P7 on the AM-319-20 board.
- C/S bus cable connects at P8 on the AM-319-20 board.

## THE NEW I/O PANEL ASSEMBLY

The new rear panel, included in your kit, is partially assembled. To complete the assembly:

1. Install the AM-368-20 Ethernet connector board assembly in the 15-pin D-Sub connector hole in the rear panel bracket (DWF-20772-02) supplied in your upgrade kit. Mount this bracket in the top I/O paddle card slot in the new rear panel.
2. Install all existing I/O board paddle cards in the slots below the AM-368-20 Ethernet connector board. Be sure that the top I/O board is terminated and the 60 pin I/O cable stops on the last connector. To verify I/O board compatibility, please refer to Chapter 2.
3. Lay new I/O panel assembly outside the rear panel with the cables side up, as if it were ready to tilt up 90° and attach to chassis.
4. Connect the four printer cables to P5 (LPT0), P2 (LPT1), P1 (LPT2), and P4 (LPT3) on the AM-319-20 board.
5. If there is a hole in the side of the chassis for the old power supply switch, slide the Roadrunner logo assembly (DWB-20468-00) into the slot in the side panel (optional).

## INSTALLING THE ROADRUNNER 75 BOARD

1. Attach the Roadrunner 75 board to the mounting plate (DWF-20762-01) with four Phillips pan-head screws (.312" long).
2. Install memory SIMMs in **pairs of equal capacity**. Please refer to Table 3-1 for explicit configurations to accomplish the desired total memory.
3. Carefully slide the mounting plate, with the Roadrunner 75 board on it, into the fourth nylon card guide from the top to allow room for the I/O connectors. Make sure you orient the Roadrunner 75 board so the SCSI connector is toward the rear of the chassis. You will be able to slide the Roadrunner 75 board back and forth on its nylon card guide until you have completed the installation.
4. Tilt up the rear panel and attach it to the chassis, making sure no cables are trapped or pinched between the rear panel and the chassis.
5. Plug the two DC power connectors from the power supply into the AM-319-20 board. The power supply is on the new rear panel assembly, at one end. Two extension harnesses are provided so the DC cables reach the connectors on the board. The extension harnesses are clearly marked as P9 and P8, same as the power supply connectors. Follow these instructions, supporting the bottom of the AM-319-20 with one hand while pushing the connectors all the way in with the other hand:
   - The power supply cable connector marked P9 plugs in at the J5 connector on the AM-319-20 board.
   - The power supply cable connector marked P8 plugs in at the J6 connector on the AM-319-20 board.
   - The J7 connector on the AM-319-20 board is not used.

If the DC power connectors on your computer are not labeled, contact your Alpha Micro dealer or Alpha Micro's Technical Assistance Center. **Do not plug in the connectors until you are certain where they go.**

Use the following table as a guide for your DC power connectors. Ensure that voltages marked on the board coincide with the correct color coded wire harness from the power supply.

| Wire Color | Voltage: |
|---|---|
| Yellow | +12 |
| Red | +5 |
| White | -5 |
| Blue | -12 |
| Black | Ground |
| Orange | Power Good |

***Power Supply DC Cable Voltage Color Coding***

8. Plug in the DC power connector from the power supply at P4 on the Roadrunner 75 board.
9. At J1 on the Roadrunner 75, plug in one end of the RJ-45 (Ethernet) cable included in your product kit. Plug the other end into the RJ45 connector on the AM-368-20 board already mounted to the rear panel.
10. At P6 on the Roadrunner 75, plug one end of the optional 6 conductor Ethernet indicator cable which may be included in your product kit. Plug the other end into the 6 pin connector on the AM-368-20 board on the rear panel.

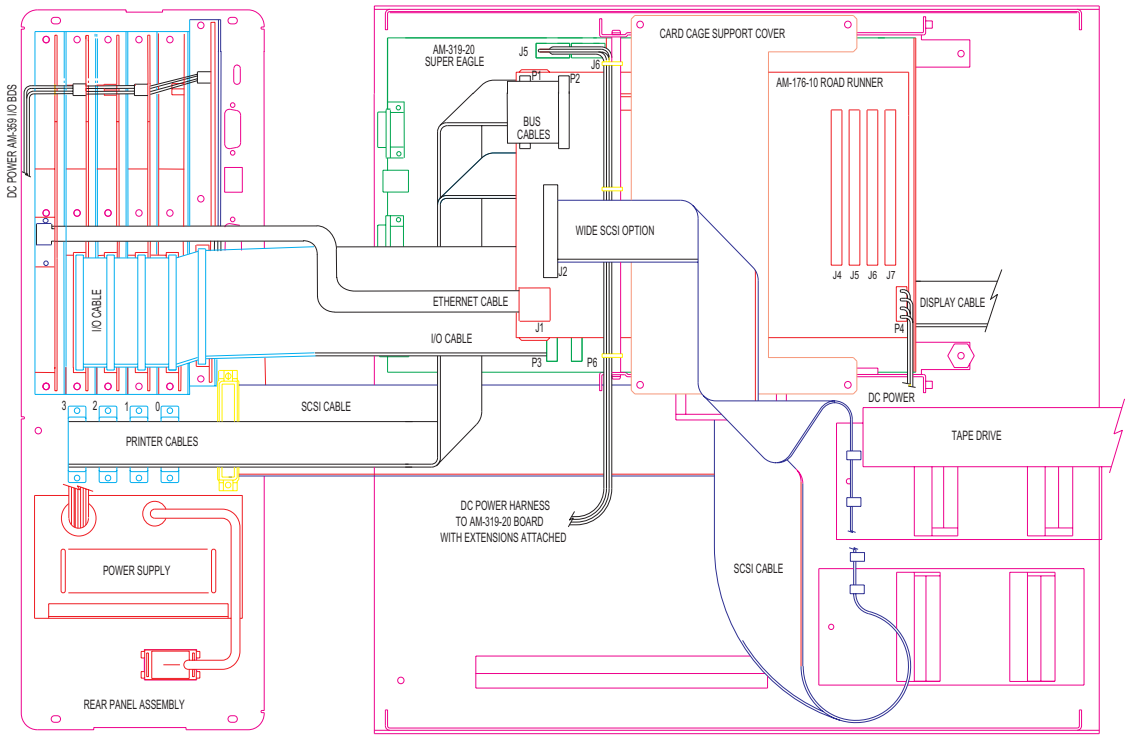


***Figure C-1: AM-319-20 and Roadrunner 75 Cabling (Pedestal Chassis)***

## X-Bus Cable Routing

The cables have keyed connectors. It is vital that you always align the red stripe on the cable with pin-1 on the connector.

Connect the two Roadrunner X-bus cables (originating on the AM-319-20 board) to the Roadrunner 75 board, as follows:

- C/S bus cable at P2 on the Roadrunner 75 board (from P8 on the AM-319-20 board).
- A/D bus cable at P1 on the Roadrunner 75 board (from P7 on the AM-319-20 board).

## Installing the SCSI Cable

The Roadrunner 75 includes a 68 pin wide SCSI connector. Please refer to Chapter 2 for more information on SCSI devices and cables.

1. Once you have determined whether you are connecting to a narrow or wide SCSI bus:

    - For a wide SCSI bus implementation, plug the 68-pin Wide SCSI cable into the Roadrunner 75 board at J2.

    **or**

    - For a narrow SCSI bus implementation, install the 68 to 50 pin adapter included in your wide-to-narrow SCSI Host adapter kit in J2 of the Roadrunner 75 board. Then plug the narrow SCSI cable into the 68 to 50 pin adapter.

2. Mount the card cage cover plate (DWF-20304-00) on top of the card cage and fasten with four 6-32 Phillips pan-head screws (.312" long), one per corner.
3. Route the SCSI bus cable over the top of the bracket so it cannot interfere with the fan on the Roadrunner 75 board.
4. Route the SCSI cable to the SCSI peripherals and out to the external SCSI connector on the rear panel. Plug the cable into each disk or tape drive.

If you are connecting Wide SCSI devices to a narrow cable, or vice-versa, be sure to use the appropriate adapter between the device and the cable connector.

5. Make sure the SCSI cable is terminated properly. This normally means plugging an external active terminator into the external SCSI port on the internal top panel or on the rear of the display panel. See Appendix A for more information on SCSI termination.
6. Attach the DC power cables (from the power supply) to each SCSI disk drive and peripheral.

Please refer to Chapter 2 for compatibility and instructions on the installation of SCSI devices and cabling.

## INSTALLING THE NEW I/O REAR PANEL

1. Install the retainer bracket (DWF-20782-00 ) to keep the Roadrunner 75 mounting plate in position.
2. Tilt the new rear I/O panel assembly up and fasten with four screws on the four corners of the back panel.

3. Attach the AM-319-20 connectors to the rear panel with hex standoffs and the AUI slide latch assembly.

## FINISHING UP

The hardware portion of the upgrade is complete. Return to Chapter 6 for the testing and booting procedures for the Roadrunner 75. Perform these procedures before attaching the computer's cover, in case you need to make some adjustments.

Once your system completes the testing procedures successfully:

1. Attach the cover
2. Attach the pedestal feet.
3. Install the system logo plate on the display panel near the Alpha Microsystems logo (optional).

# Appendix D - AM-4000 Rack Mount Chassis Upgrade

In this upgrade the Roadrunner 75 and the AM-319-20 boards functionally replace the AM-190 board. This upgrade procedure involves the removal of the old CPU and the installation of two new boards. The following instructions walk you through this process.

## PREPARING FOR THE UPGRADE

Before embarking on this upgrade, please ensure you have completed all of the steps in Chapter 5 "Beginning a Roadrunner 75 Upgrade." Do not begin the hardware installation until you've performed all of the necessary preliminary processes.

While your computer's hardware is exposed and the AC power cord is unplugged, the components are vulnerable to damage caused by static discharge. Before you handle any computer hardware, make certain your work area is properly protected against static discharge.

## ACCESSING YOUR HARDWARE

1. Power down your computer and remove all cables from back panel, including the power cord.
2. Unlatch slides and carefully slide rack out of system.
3. Remove the seven screws that hold top cover to chassis.
4. Lift top cover off and place it out of the way.
5. To remove the rear I/O panel:
    - Remove the four screws that hold the I/O panel to the chassis.
    - Lay the I/O panel next to the rear of the chassis.
    - Unplug the 60-pin I/O cable from the AM-190 board.
    - Set the I/O panel aside without removing the paddle boards.

If you have a 21-slot double high rack mount chassis, you will have two rear I/O panels, one above the other. You may not need to remove the top I/O panel unless there are plug-in boards that need to be removed from the upper card cage area. If you do need to remove the upper rear panel, follow the same instructions you used to remove the lower rear panel.

## REMOVING THE OLD CPU

1. Disconnect all the cables attached to the old CPU board. Mark these clearly for identification purposes.
2. After unplugging the CPU board end of the 26-pin display cable to the front panel, carefully, re-route cable out of the card cage and back toward the front panel.

3. Unplug the 50-pin SCSI interface cable from all SCSI peripherals as well as your old CPU board and remove it from the system (this cable will be replaced with the cable included in the upgrade kit).
4. If you have an AM-219 floppy controller board, remove it from the AM-190 board. Insure you save the two standoffs that attach the AM-219 to the AM-190.
5. Remove all ESDI drives, cables and controllers.
6. Remove any other VME boards in the card cage.
7. Remove the two screws that attach the CPU rear panel to the chassis
8. Slide the AM-190 board out of the card cage.

## EXTENDING THE CARD CAGE

To make room for the Roadrunner 75 board while maintaining appropriate spacing for the I/O paddle boards, you need to extend the motherboard 1.5" from the card cage within your rack. To do so:

1. Remove the screws that attach the motherboard to the card cage. There are six screws (three per side) for 10-slot units, and eight screws (four per side) for 21-slot units. Pull the motherboard back to allow you space to work, but do not take it out of the card cage or disconnect the power supply harness.
2. Remove the four screws (and washers) or nuts that attach the cable shield and the card cage to the bottom of the chassis. You will not be using the cable shield anymore, so you can discard it.
3. Re-position the card cage, making sure to tighten the screws or nuts.
4. The upgrade kit includes sixteen standoffs to extend the motherboard from the card cage, as follows:
    - For 10-slot card cage configurations, make four spacers, each consisting of two standoffs (1.5" long). For 21-slot card cage configurations, make eight spacers.
    - Attach spacers to the card cage, one at each corner for 10-slot card cage. For 21-slot card cage configurations, attach four spacers to each side of the card cage.
5. Mount the motherboard to the spacers and fasten tightly at each spacer.

## INSTALLING THE AM-319-20 BOARD

Insert the AM-319-20 board into the card cage using the following procedure:

1. Install the new SSD chip (PDB-00014-14), included in your upgrade kit, at U73. This 28-pin PLCC socket is clearly marked on the AM-319-20 board.
2. Attach the new rear panel adapter plate to the AM-319-20 by inserting the two hex 4/40 standoffs at the DB-9 connector and the slide latch assembly for the AUI DB-15 connector.
3. If you have an AM-219 floppy controller board, refer to PDI-00219-00 (Rev. A01 or later), for installation instructions. Follow the directions for attaching the AM-219 to an AM-319-20 in an Eagle 550.
4. Re-route and fold the display cable between the motherboard and the card cage side bracket.

5. Align the AM-319-20 board with the bottom nylon card guide and insert it gently into the bottom slot of the chassis. Fasten both Phillips-head screws on the rear panel adapter to chassis.
6. Plug the 26-pin panel display cable into the P12 connector on the AM-319-20 board. Make sure the red stripe on the cable aligns with pin-1 on the connector.
7. The kit includes two X-bus cables, which will be labeled as A/D and C/S.

Your kit provides labels for these two cables. Label both ends of the connectors before attaching them to the AM-319-20 board. Once the two cables are plugged into the AM-319-20, and you have slid the Roadrunner 75 board on its mounting plate over it, you will not be able to differentiate between them since you must fold and tuck them in.

Insure the red stripe on each cable lines up with pin-1 on each connector. Pin-1 is oriented toward the rear of the chassis. Both cables, when properly oriented, will exit the shrouded connector toward the center of the AM-319-20 board. Install as follows:

- A/D bus cable connects at P7 on the AM-319-20 board.
- C/S bus cable connects at P8 on the AM-319-20 board.

## NEW DC POWER HARNESS INSTALLATION

Plug the DC power harnesses and discrete wires into the motherboard as indicated below. ***CAUTION: Reversing the order of these cables will result in damage to your board.***

If the DC power connectors on your computer are not labeled, contact your Alpha Micro dealer or Alpha Micro's Technical Assistance Center. **Do not plug in the connectors until you are certain where they go.**

Support the bottom of the AM-319-20 with one hand, while pushing the connectors all the way in with the other. Attach the DC power wires and the new harness as follows:

***For 10-slot card cages:***

- Attach the blue discrete wire (-12V) at J8, pin-1 on the motherboard.
- Attach the red discrete wire (+5V) at J9, pin-2 on motherboard.
- Attach the gray discrete wire from new harness (power good signal) to the discrete wire attached to the motherboard at J7, pin-1. Unplug wire from motherboard and plug the two wires together.
- Attach P1 from harness at J6 on the AM-319-20 board.
- Attach P2 from harness at J5 on the AM-319-20 board.
- Attach new harness, P3, to the J3 connector on the motherboard (if available). If J3 is not available, move the connectors or use a "Y" cable.

***For 21-slot card cages:***

- Attach the blue discrete wire (-12V) at J12 (upper contact) on the motherboard.
- Attach the red discrete wire (+5V) at J13 (lower contact) on the motherboard.
- Attach the gray discrete wire from new harness (power good signal) to the discrete wire attached to the motherboard at J9, pin-1. Unplug wire from motherboard and plug the two wires together.

- Attach P1 from harness at J6 on the AM-319-20 board.
- Attach P2 from harness at J5 on the AM-319-20 board.
- Attach new harness, P3, to the J3 connector on the motherboard (if available). If J3 is not available, move the connectors or use a "Y" cable.

## REAR PANEL I/O ASSEMBLY

To complete the rear panel assembly, do the following:

1. Lay new I/O panel assembly outside the rear panel with the cables side up, as if it were ready to tilt up 90° and attach to chassis.
2. Install the AM-368-20 Ethernet connector board assembly included in your upgrade kit in the 15 pin D-sub connector hole in the new Roadrunner 75 connector bracket (DWF-20772-02). Then install the bracket assembly in the top I/P paddle card slot of the new rear panel.
3. Mount each existing I/O paddle card below the AM-368-20 on the new rear panel, leaving one I/O slot at the bottom to allow for the printer port connectors from the Roadrunner 75. Be sure that the last I/O board is terminated and the I/O cable stops on the last connection.
4. Mount the four printer ports (provided with upgrade kit) to the new rear panel at the first slot above the AM-319-20 board with three screws.

## INSTALLING THE ROADRUNNER 75 BOARD

1. Attach the Roadrunner 75 board to the mounting plate (DWF-20762-01) with four Phillips pan-head screws (.312" long).
2. Install the memory SIMMs in **pairs of equal capacity**. Please refer to Table 3-1 for explicit configurations to accomplish the desired total memory.
3. Carefully slide the mounting plate, with the Roadrunner 75 board on it, into the third or fourth nylon card guide from the bottom to allow room for the I/O connectors. You will be able to slide the Roadrunner 75 board back and forth on its nylon card guide until you have completed the installation.
4. Plug in the DC power connector at P4 on the Roadrunner 75 board and attach it to an open power connector on the motherboard. If you do not have any available power connectors on the motherboard, a "Y" connector is furnished with the upgrade kit.
5. At J1 on the Roadrunner 75 board, plug in one end of the RJ-45 Ethernet cable included in your product kit. Plug the other end into the RJ-45 connector on the AM-368-20 board already mounted to the rear panel.
6. At P6 on the Roadrunner 75 board, plug one end of the optional 6 conductor Ethernet indicator cable which may be included in your product kit. Plug the other end into the 6 pin connector on the AM-368-20 board on the rear panel.
7. Connect the two Roadrunner X-bus cables (originating on the AM-319-20 board) to the Roadrunner 75 board, as follows:
    - C/S bus cable into P2 on the Roadrunner 75 board (from P8 on the AM-319-20 board).

- A/D bus cable into P1 on the Roadrunner 75 board (from P7 on the AM-319-20 board).

8. Fix the Roadrunner 75 board with the retainer bracket (DWF-20782-00) provided in the kit. Make sure the tab on the bracket goes into the slot on the card cage. See Figure D-2.
9. Mount the card cage cover plate (DWF-20304-00) on top of the card cage and attach with four screws, one per corner. See Figure D-2.
10. Attach the I/O cable at P3 on the AM-319-20 board.
11. Reinstall the I/O panel with four screws.
12. Note that, for 21-slot chassis installation, the card cage cover plate shown in Figures D-1 and D-2 is not used.

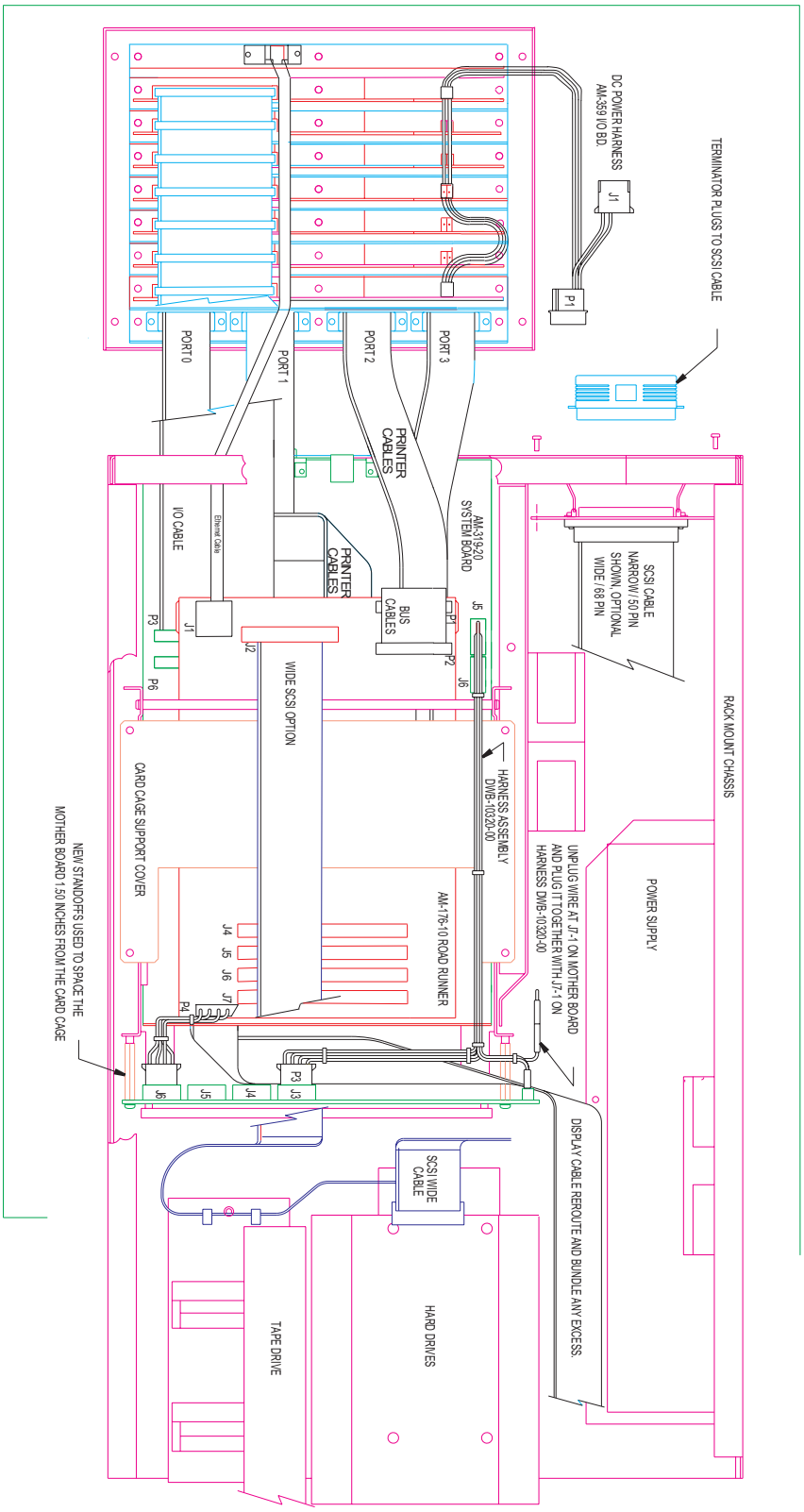


***Figure D-1: Top View, AM-319-20 and Roadrunner 75 Cabling (10-Slot Rack Mount Chassis)***

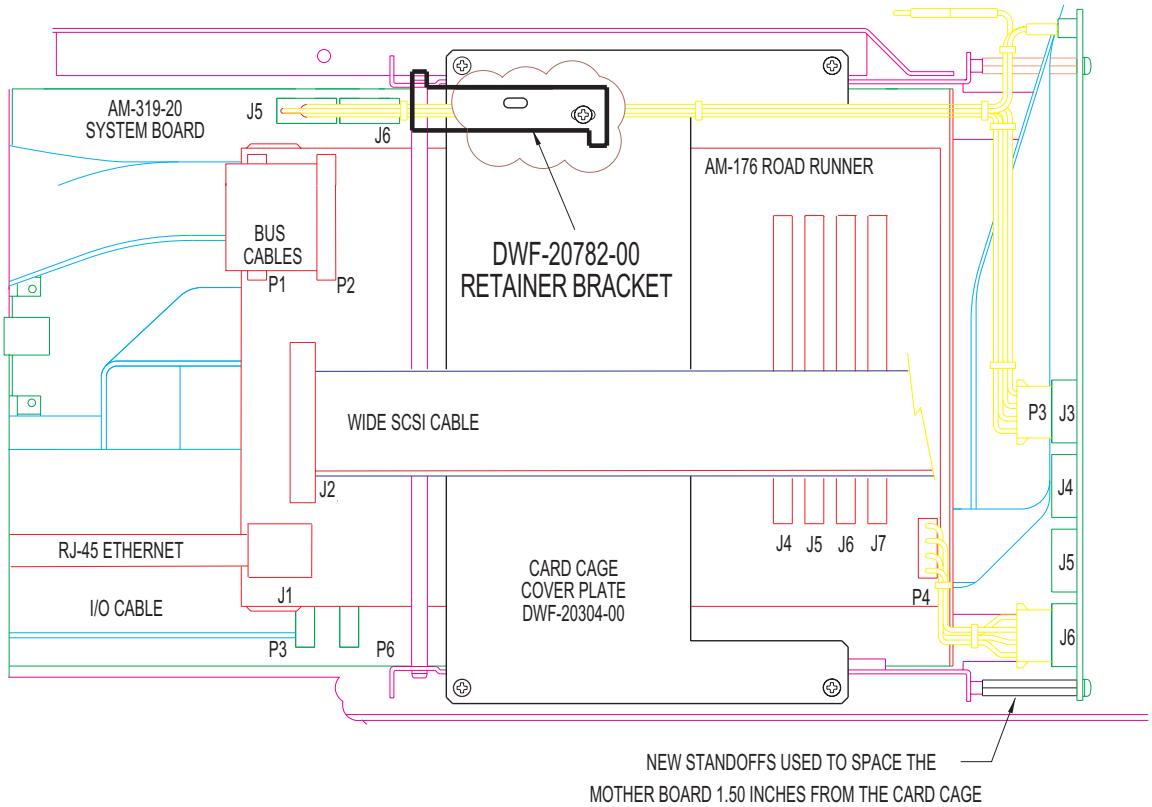


***Figure D-2: Top View, Retainer Brackets (10-Slot Rack Mount Chassis)***

## Installing the SCSI Cable

The Roadrunner 75 board upgrade kit includes a 68 pin wide SCSI connector. Please refer to Chapter 2 for more information on SCSI devices and cables.

1. Once you have determined whether you are connecting to a narrow or wide SCSI bus:

   - For a wide SCSI bus implementation, plug one end of the new 68-pin wide SCSI cable into the Roadrunner 75 board at J2.

   **or**

   - For a narrow SCSI bus implementation, install the 68-to-50 pin adapter included in your wide-to-narrow- SCSI host adapter kit in J2 of the Roadrunner 75 board. Then plug one end of the narrow SCSI cable into the 68-to-50 pin adapter.

2. Route the SCSI cable from J2 on the Roadrunner 75 board around the motherboard, between the edge of the motherboard and the chassis side panel, to the SCSI peripherals in the front of the chassis. After attaching the SCSI peripherals to the SCSI cable, route the remaining portion of the cable between the card cage and the power supply and out to the rear panel. Remove and discard the VCR interface bracket at the rear panel, if this has not already been done. The external end of the SCSI cable should be mounted to the terminator bracket furnished in the upgrade kit, and this entire assembly then mounted to the back panel where the VCR interface bracket had previously been mounted.

If you are connecting Wide SCSI peripherals to a narrow cable, or vice-versa, be sure to use the appropriate adapter between the peripheral and the cable connector.

3. Make sure the SCSI cable is terminated properly. This normally means plugging an external active terminator into the external SCSI port on the back panel. See Appendix A for more information on SCSI termination.

## FINISHING UP

The hardware portion of the upgrade is complete. Return to Chapter 6 for the testing and booting procedures for the Roadrunner 75. Once your system completes the testing procedures successfully:

1. Attach the top cover to the chassis with seven screws.
2. Slide the rack back into the cabinet. Make certain the slides latch.
3. Install the system logo plate on the front panel, near the Alpha Microsystems logo.

# Appendix E - AM-4000 in AM-990 or AM-990 Jumbo Chassis Upgrade

In this upgrade the Roadrunner 75 and the AM-319-20 boards functionally replace the AM-190 board. This upgrade procedure involves the removal of the old CPU and the installation of two new boards. The following instructions walk you through this process.

## PREPARING FOR THE UPGRADE

Before embarking on this upgrade, please ensure you have completed all of the steps in Chapter 5 "Beginning a Roadrunner 75 Upgrade." Do not begin the hardware installation until you've performed all of the necessary preliminary processes.

While your computer's hardware is exposed and the AC power cord is unplugged, the components are vulnerable to damage caused by static discharge. Before you handle any computer hardware, make certain your work area is properly protected against static discharge.

## ACCESSING YOUR HARDWARE

1. Power down your computer. Remove all cables attached to the rear panel, including the power cord.
2. Insert the key originally shipped with your computer in the door lock and open it.
3. To remove the top panel:
    - Swing the front door open to expose the screws that hold the top cover in place. See Figure E-1.
    - Remove the two Phillips-head screws that connect the top cover to the chassis.
    - Remove the display key from the front panel before you attempt to remove the top cover.
    - Slide the top cover forward and lift it off. Set it aside.

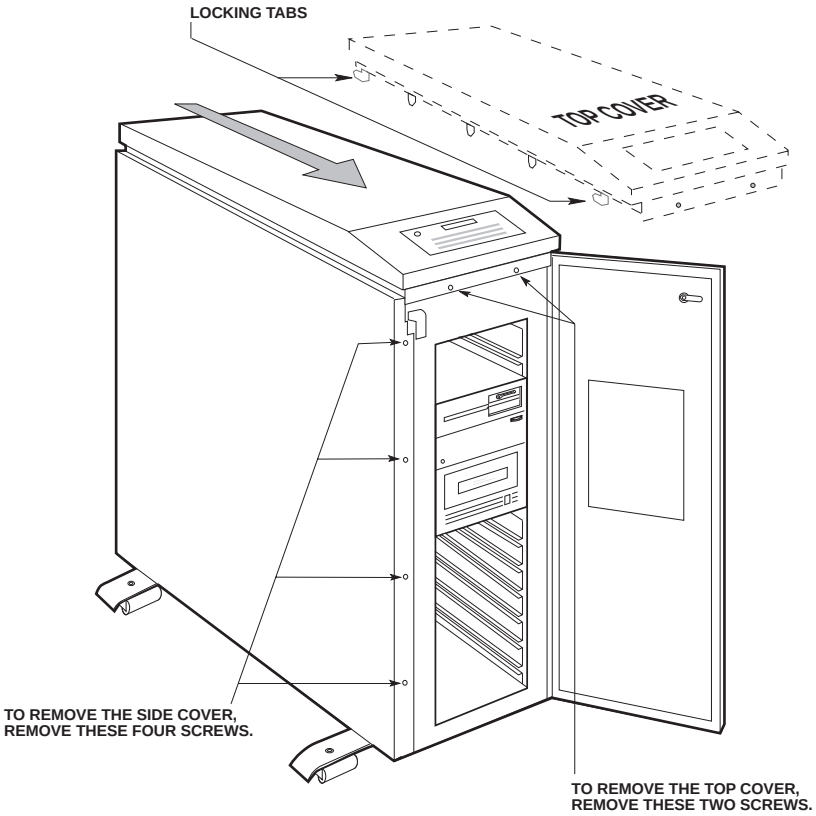


***Figure E-1: AM-990 Enclosure Removal***

4. To remove the side and rear panels:
   - Swing the front door open to gain access to the screws that hold the side panel to the chassis.
   - Remove the four screws along the left edge (behind the front door). Lift the side panel, slide it to the front, and place it out of the way.

   For ease of assembly, lay the AM-990 chassis on its side, bezel away from you. We recommend that you place the chassis on a padded work surface. Remove the feet from the bottom of the chassis, or let them hang over the edge of a table.

   - Remove the card cage lid (DWF-20670-00) by removing the five screws and lifting it out of the way.
   - Remove the four screws that hold the rear I/O panel to the card cage and unplug I/O cable.
   - Move the rear I/O panel out of the way. You will be installing a new I/O rear panel, included in your upgrade kit.

## REMOVE YOUR OLD CPU

1. Remove the two screws at the bottom of the back panel that attach your old CPU to the card cage.

2. Disconnect all cables attached to the old CPU board. Mark these clearly for identification purposes, as follows:
    - The 26-pin display to the front panel.
    - The 50-pin SCSI interface cable from your old CPU board (this cable will be replaced with the cable included in the upgrade kit).
    - The DC power cables from the power supply, if used.
    - Bus B serial I/O cables to the internal I/O boards at the top, if present.
3. If you have an AM-219 floppy controller board, remove it from the AM-190 board. Save the two standoffs that attach the AM-219 to the AM-190 CPU board.
4. Slide the old CPU out of the card cage.
5. Remove the VME backplane.

## ASSEMBLING THE NEW REAR I/O PANEL

A new, extended rear panel assembly is included in your upgrade kit.

1. Attach the four parallel printer ports to the first slot in the rear panel (when installed in the chassis, this should be the first slot above the AM-319-20 board).
2. Mount the Roadrunner 75 connector bracket in the last slot above the AM-319-20. Then install the AM-368-20 Ethernet connector board in the 15-pin D-Sub connector hole in this mounting plate.
3. Attach I/O paddle cards to the second through the fifth slots on the rear panel. Refer to Chapter 2 for I/O board compatibility. Make certain the last I/O board is terminated and the I/O cable stops on the last connection.

## INSTALLING THE AM-319-20 BOARD

1. Install the new SSD chip, included in your upgrade kit, at U73 on the AM-319-20 board. This 28-pin PLCC socket is clearly marked.
2. If you have an AM-219 floppy controller board, refer to PDI-00219-00 (Rev. A01 or later), for installation instructions. Follow the directions for attaching the AM-219 to an AM-319-20 in an Eagle 550.
3. Attach the new rear panel adapter plate to the AM-319-20 by inserting the two hex 4/40 standoffs at the DB-9 connector and attach the slide latch assembly to the AUI DB-15 connector.
4. Align the AM-319-20 board with the bottom nylon card guide and insert it gently into the bottom slot of the chassis. Fasten both Phillips-head screws on the rear panel adapter to chassis.
5. Plug the 26-pin panel display cable into the P12 connector on the AM-319-20 board. Make sure the red stripe on the cable aligns with pin-1 on the connector. Bundle any excess.

6. Lay the new rear I/O panel assembly outside its location in the chassis. You want the cables to protrude so you can attach them when necessary.
7. Attach the four parallel printer connectors at the clearly marked locations P5 (LPT0), P2 (LPT1), P4 (LPT2), and P1 (LPT3) on the AM-319-20 board.

If your system has a VME motherboard, you must replace the DC power harness, as follows:

- Disconnect the DC power adapter harness from the motherboard.
- Unplug the motherboard adapter harness from the power supply.
- Replace with the new DC power adapter harness, DWB-10305-00, which is furnished with the upgrade kit.

8. Plug the three DC power connectors from the power supply harnesses into the AM-319-20 board. ***CAUTION: Reversing the order of these cables will damage your board***.

   Support the bottom of the AM-319-20 board with one hand, while pushing these connectors all the way in with the other hand.

   - The cable connector marked PS2 plugs in at the J5 connector on the AM-319-20 board. This cable has +5, -5, and ground as marked on the edge of the AM-319-20.
   - The cable connector marked PS1 plugs in at the J6 connector on the AM-319-20 board.
   - The cable connector marked PS3, if present, plugs in at the J7 connector on the AM-319-20 board.

   If the DC power connectors on your computer are not labeled, contact your Alpha Micro dealer or Alpha Micro's Technical Assistance Center. **Do not plug in the connectors until you are certain where they go.**

   Use the following table as a guide for your DC power connectors. Ensure that voltages marked on the board coincide with the correct color coded wire harnesses from the power supply.

| Wire Color | Voltage: |
|---|---|
| Yellow | +12 |
| Red | +5 |
| White | -5 |
| Blue | -12 |
| Black | Ground |
| Orange | PG |

***Power Supply DC Cable Voltage/Color Coding***

9. The upgrade kit provides two X-bus cables and two sets of labels (one for A/D, and one for C/S). Label both connector ends before attaching to the AM-319-20. Once you slide the Roadrunner 75 board mounting over it, you will be unable to differentiate which is which. Make sure the red stripe on the cable aligns with pin-1 on the mating connector. Install:

- A/D bus cable at P7 on the AM-319-20 board
- C/S bus cable at P8 on the AM-319-20 board

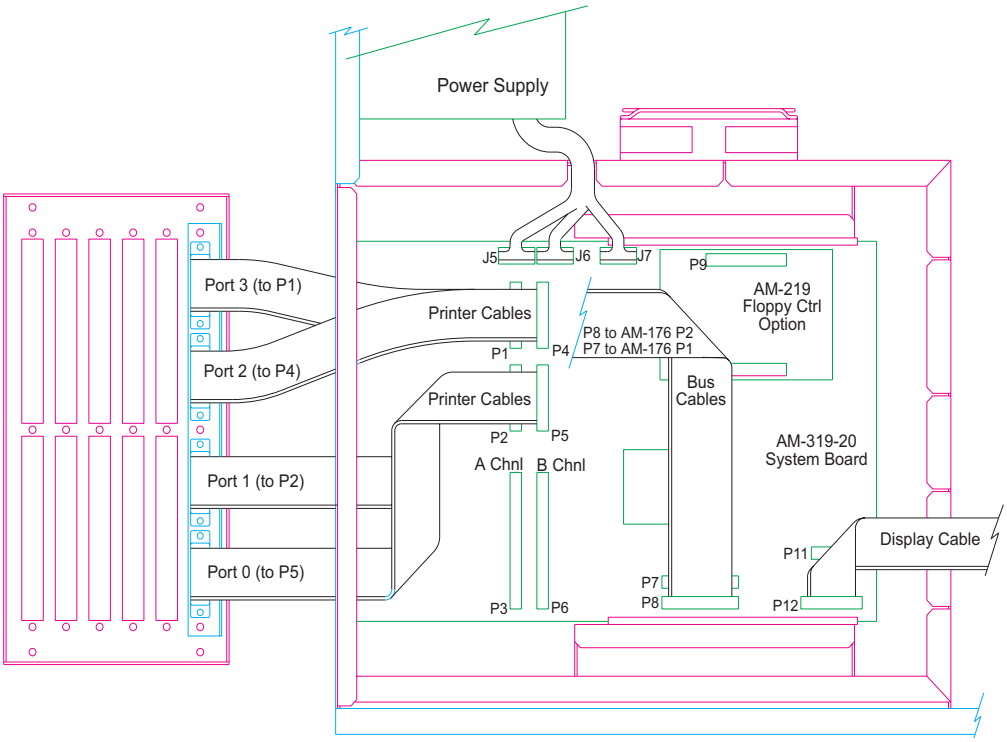


***Figure E-2: AM-319-20 Board and Cable Routing (AM-990 Chassis)***

## INSTALLING THE ROADRUNNER 75 BOARD

1. Assemble the Roadrunner 75 board on the mounting plate (DWF-20762-01) with four Phillips pan-head screws (.312" long).
2. Fasten the nylon screw included in the kit into the center threaded standoff in the front of the card cage, so when you slide the Roadrunner 75 board into position, there is no possibility of it shorting out.
3. Install memory SIMMs in **pairs of equal capacity**. Please refer to Table 3-1 for explicit configurations to accomplish the desired total memory.

4. Carefully slide the mounting plate, with the Roadrunner 75 board mounted on it, into the fourth nylon card guide from the top to allow room for the AM-319-20 board and I/O connectors. Make sure you orient the Roadrunner 75 board so the SCSI connector is toward the rear of the chassis.

   In the Jumbo chassis, you can use the fifth or sixth slot instead of the fourth. If you do, be sure to install the nylon screw into the proper standoff in step 2, above. Also, be sure there is enough room for the CPU fan under the card cage cover plate.

5. Plug in the DC power connector from the power supply at P4 on the Roadrunner 75 board.
6. At J1 on the Roadrunner 75 board, plug in one end of the RJ-45 Ethernet cable included in your product kit. Plug the other end into the RJ-45 connector on the AM-368-20 board already mounted to the rear panel.
7. At P6 on the Roadrunner 75 board, plug one end of the optional 6-conductor Ethernet indicator cable which may be included in your product kit. Plug the other end into the 6-pin connector in the AM-368-20 board mounted on the rear panel.

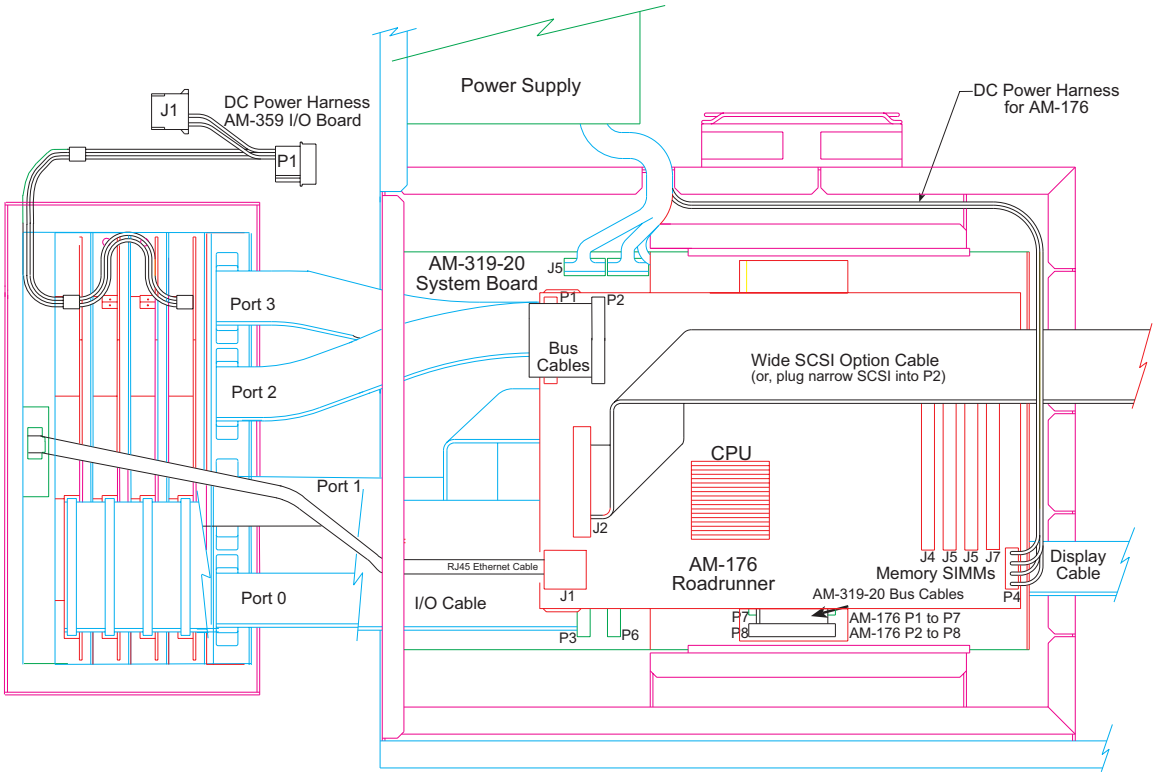


***Figure E-3: AM-319-20 and Roadrunner 75 Cable Routing (AM-990 Chassis)***

## X-Bus Cable Routing

These cables have keyed connectors. It is vital that you always align the red stripe on the cable with pin-1 on the connector.

Connect the two Roadrunner X-bus cables (originating at the AM-319-20 board) to the Roadrunner 75 board, as follows:

- C/S bus cable into P2 on the Roadrunner 75 board (from P8 on the AM-319-20 board)
- A/D bus cable into P1 on the Roadrunner 75 board (from P7 on the AM-319-20 board)

## Installing the SCSI Cable

The Roadrunner 75 board includes a 68 pin wide SCSI connector. Please refer to Chapter 2 for more information on SCSI devices and cables.

2. Once you have determined whether you are connecting to a narrow or wide SCSI bus:

   - For a wide SCSI bus implementation, plug one end of the new 68-pin wide SCSI cable into the Roadrunner 75 board at J2.

     **or**

   - For a narrow SCSI bus implementation, install the 68-to-50 pin adapter included in your wide-to-narrow- SCSI host adapter kit in J2 of the Roadrunner 75 board. Then plug one end of the narrow SCSI cable into the 68-to-50 pin adapter.

3. Fix the Roadrunner 75 board with the retainer bracket (DWF-20782-00) provided in the kit. Screw the bracket into the standoff on the Roadrunner 75 mounting plate, and insert the wider of the two tabs on the bracket into the slot on the card cage. When oriented correctly, the bracket will not be able to swivel enough to touch the circuit board. See Figures E-4 and E-5.

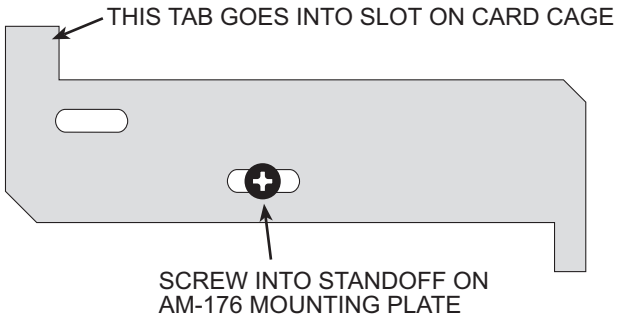


***Figure E-4: Retainer Bracket (detail)***

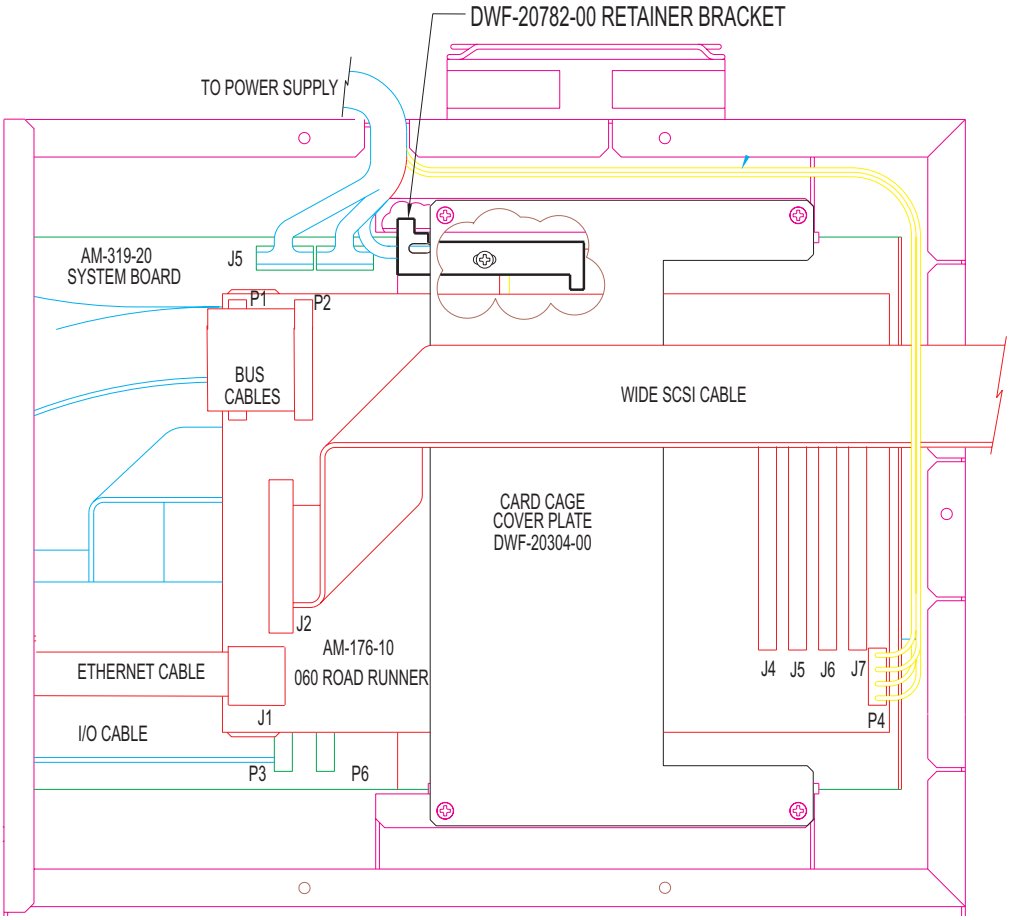


***Figure E-5: Roadrunner 75 Retainer Bracket Placement***

1. Mount the card cage cover plate (DWF-20304-00) on top of the card cage and attach with four screws, one per corner.
2. Route the SCSI bus cable over the top of the cover plate so it cannot interfere with the fan on the Roadrunner 75 board.
3. Route the SCSI cable to the SCSI peripherals and out to the external SCSI connector on the internal top panel or on the rear of the display panel. Plug in the cable to each SCSI disk or tape drive.

If you are connecting Wide SCSI devices to a narrow cable, or vice-versa, be sure to use the appropriate adapter between the device and the cable connector.

4. Make sure the SCSI cable is terminated properly. This normally means plugging an active external terminator into the external SCSI port on the internal top panel or on the rear of the display panel. See Appendix A for more information on SCSI termination.

Please refer to Chapter 2 for compatibility and instructions on the installation of SCSI devices and cabling.

## INSTALLING NEW REAR I/O PANEL

To ensure all I/O boards have adequate space, we have enlarged the card cage by adding a new, deeper rear panel. Once you've attached the I/O paddle cards to the new I/O rear panel, install it as follows:

1. Using the twelve ½" x 6/32 standoffs in your kit, make four sets of spacers (1.5" long each) by threading three standoffs together for each spacer.
2. Fasten the spacers into the four holes on the rear of the card cage.
3. Lay the I/O panel assembly flat next to the chassis, as if it were ready to tilt up 90° and attach to chassis (with paddle cards up).
4. Connect the I/O paddle board cable to the A Channel at P3 on the AM-319-20 board, and the optional B Channel cable at P6.
5. Tilt the I/O panel up and fasten to the four spacers you attached to the back of the card cage.

## FINISHING UP

The hardware portion of the upgrade is complete. Return to Chapter 6 for the testing and booting procedures for the Roadrunner 75. Perform these procedures before replacing the computer's enclosure, in case you need to make some adjustments.

Once your system completes the testing procedures successfully, replace the enclosure, as follows:

1. Replace the card cage lid and attach with five screws
2. Replace the side panel and tighten the four screws along the left edge
3. Replace the top cover. Tighten the two screws along the top edge.
4. Close and lock front door.
5. Install the system logo plate on the front door near the Alpha Microsystems logo.

# Appendix F - Super Eagle & AM-6000 Deskside Chassis Upgrade

The following instructions explain the process of installing an Roadrunner 75 into a Super Eagle computer or AM-6000 in a deskside chassis. The upgrade kit includes all the necessary hardware for installing the Roadrunner 75 board.

## PREPARING YOUR SYSTEM FOR THE UPGRADE

Before embarking on this upgrade, please ensure you have completed all of the steps in Chapter 5 "Beginning a Roadrunner 75 Upgrade." Do not begin the hardware installation until you've performed all of the necessary preliminary processes.

While your computer's hardware is exposed and the AC power cord is unplugged, the components are vulnerable to damage caused by static discharge. Before you handle any computer hardware, make certain your work area is properly protected against static discharge.

## REMOVING CHASSIS COVER

1. Power down your computer and unplug the power cord.
2. Unplug and label all external cables.
3. At the rear of the computer, remove the four screws that attach the top cover to the chassis.
4. Slide the top cover back and lift rear edge up (as indicated by the arrows on Figure F-1). Remove the cover and place it out of the way.

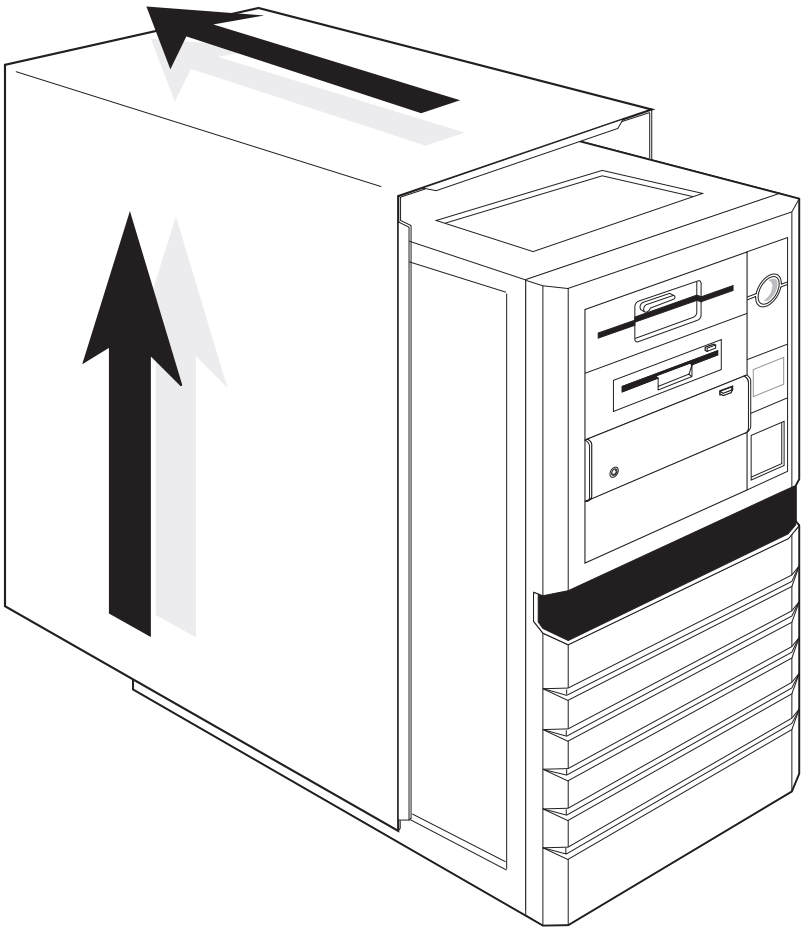

*Figure F-1: Deskside Chassis Cover Removal*

## ACCESSING THE OLD CPU BOARD

1. Remove the two screws (at each end of the panel near the center of the chassis) attaching the AM-319-20 mounting plate to the chassis. Also, remove the top hex standoff on the UPS connector.
2. Carefully lift the mounting plate up and forward, toward the front of the chassis, then out. Rest on the bottom bracket of mounting panel, close to the chassis. Do not remove cables from the AM-319-20, unless instructed below.
3. If you are adding an AM-219 floppy controller board, refer to PDI-00219-00 (Rev. A01 or later), for installation instructions. Follow the directions for attaching the AM-219 to an AM-319-20 in an Eagle 550.
4. Unplug and mark all cables from your old CPU board:
    - DC power cable
    - Two 34-pin bus cables (C/S and A/D)
    - 50-pin or 68 pin SCSI cable

## REMOVE OLD ROADRUNNER BOARD

1. Remove the four screws at the corners of the existing Roadrunner board mounted to the chassis base. Two additional screws may have been used—remove those, too. Lift the board up and out.
2. Remove existing SIMM from the CPU board, and set it aside.

## PREPARE CHASSIS FOR UPGRADE (SUPEREAGLE ONLY)

1. Older chasses contain a perforated screen on which the old Roadrunner board was mounted. If your chassis does not contain the perforated screen, but instead has a solid non-vented chassis base, skip the remaining steps in this section.
2. Remove the perforated screen and rubber feet from the bottom of the chassis. It may be mounted with four screws or four small plastic pins through feet.

You can discard the old feet and plastic pins. In the upgrade kit, you will find a new set of feet with screws and nuts, along with a completely new chassis base plate.

3. Lift the screen up and out and discard it. The Roadrunner 75 board has different mounting locations.
4. Remove the vented chassis base by drilling out the aluminum rivets that attach the base to the chassis frame. Use a 3/16” drill bit to drill out the six aluminum rivets.
5. Attach the new chassis base plate included in the upgrade kit to the chasses frame, using the screws and locknuts provided in the upgrade kit. Orient the new chassis base as shown in Figure F-2.
6. Install the new rubber feet to the bottom of the chassis plate. Please refer to Figure F-2.
7. If your chassis is furnished with a PC card guide mounting bracket mounted nearest the bezel at the front of the chassis, remove it as follows:
    - Remove the six screws that attach the front bezel panel to the chassis.
    - Remove the two screws that attach the power switch to the chassis. Carefully, pull bezel out of the way.
    - With a 3/16" drill bit, drill out the four aluminum rivets that attach the PC card guide mounting bracket to the chassis (working from the outside of the front panel).
    - Remove the PC card guide mounting bracket.
    - Clean all the debris from outside and inside the chassis.
    - Re-attach bezel and power switch.

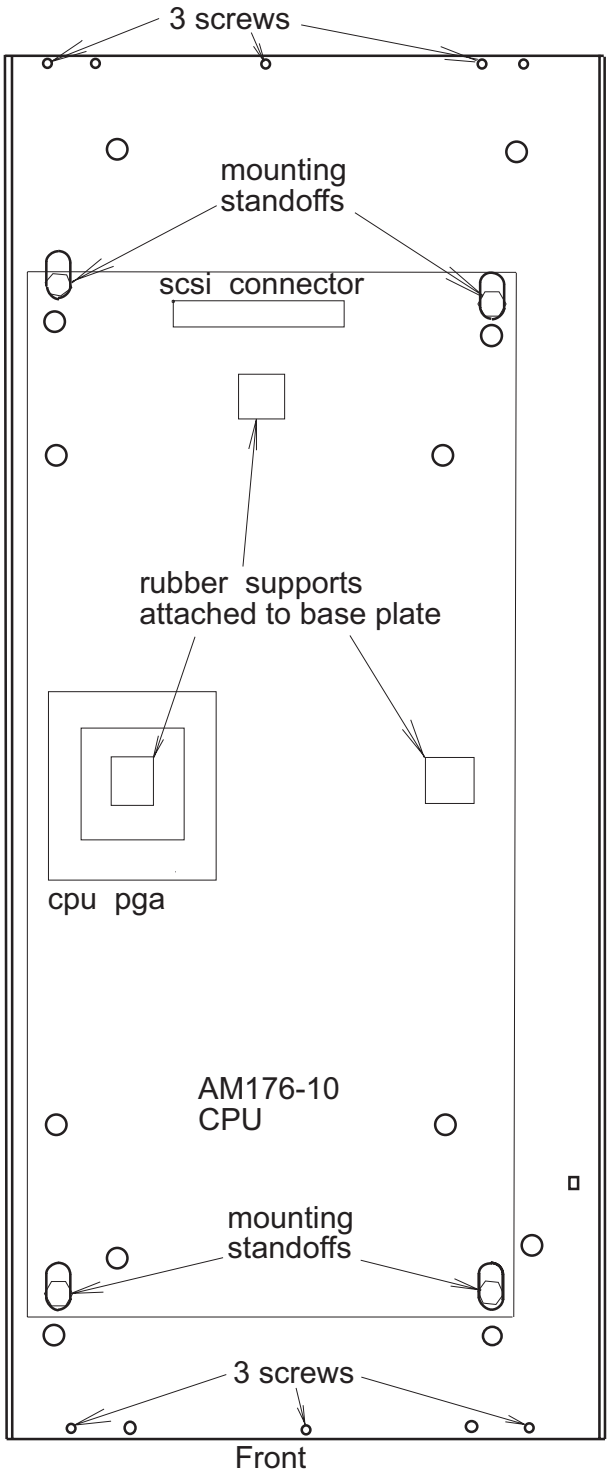


***Figure F-2: Deskside Chassis Base Details***

## INSTALLING THE ROADRUNNER 75 BOARD

1. Since the AM-319-20 board occupies the first slot on the rear panel, attach the Roadrunner 75 connector panel (DWF-20772-01), in the slot furthest away from the AM-319-20 board.
2. Install the adhesive backed rubber bumpers on the chassis mounting base, as shown in Figure F-2.
3. Place Roadrunner 75 board on the chassis mounting base, orienting the board as shown in Figure F-2. Fasten at the four indicated locations.
4. Install memory SIMMs in **pairs of equal capacity**. Refer to Table 3-1 for explicit configurations to accomplish the desired total memory.
5. Install the AM-368-20 Ethernet connector board in the 15-pin D-Sub connector hole in the Roadrunner 75 connector panel installed in step 1 above.
6. Attach the following cables to the Roadrunner 75 board:
   - RJ-45 Ethernet cable (included in Roadrunner 75 board kit) at J1. Plug the other end of this cable into the AM-368-20 Ethernet connector board mounted on the rear panel.
   - Optional 6-conductor Ethernet indicator cable (may be included in Roadrunner 75 board kit) at P6. Plug the other end of this cable into the AM-368-20 Ethernet connector board mounted on the rear panel.
   - One of the 4-pin DC power connectors from power supply at P4
7. Attach the two Roadrunner X-bus cables from the AM-319-20 board to the Roadrunner 75 board, as follows:
   - C/S bus cable plugs into P2 on the Roadrunner 75 board (from P8 on the AM-319-20 board).
   - A/D bus cable plugs into P1 on the Roadrunner 75 board (from P7 on the AM-319-20 board).

All the cables mentioned have keyed connectors. It is vital that you always align the red stripe on the cable with pin-1 on the connector.

6. Attach each I/O board using the second through the sixth. Connect A Channel at P3 and B Channel at P6 on the AM-319-20 board. Make certain the last I/O board is terminated and the I/O cable stops on last connection. See Figure F-3 below.
7. Reposition the AM-319-20 mounting plate on the side of the chassis by sliding it into the rear panel slot and pushing the mounting plate down into the two locating tabs at the bottom side of chassis and securing it with the two original screws. Attach mounting plate to the rear panel with three screws. **Make sure the phone jack connections fit through the lower slot in the rear panel.**

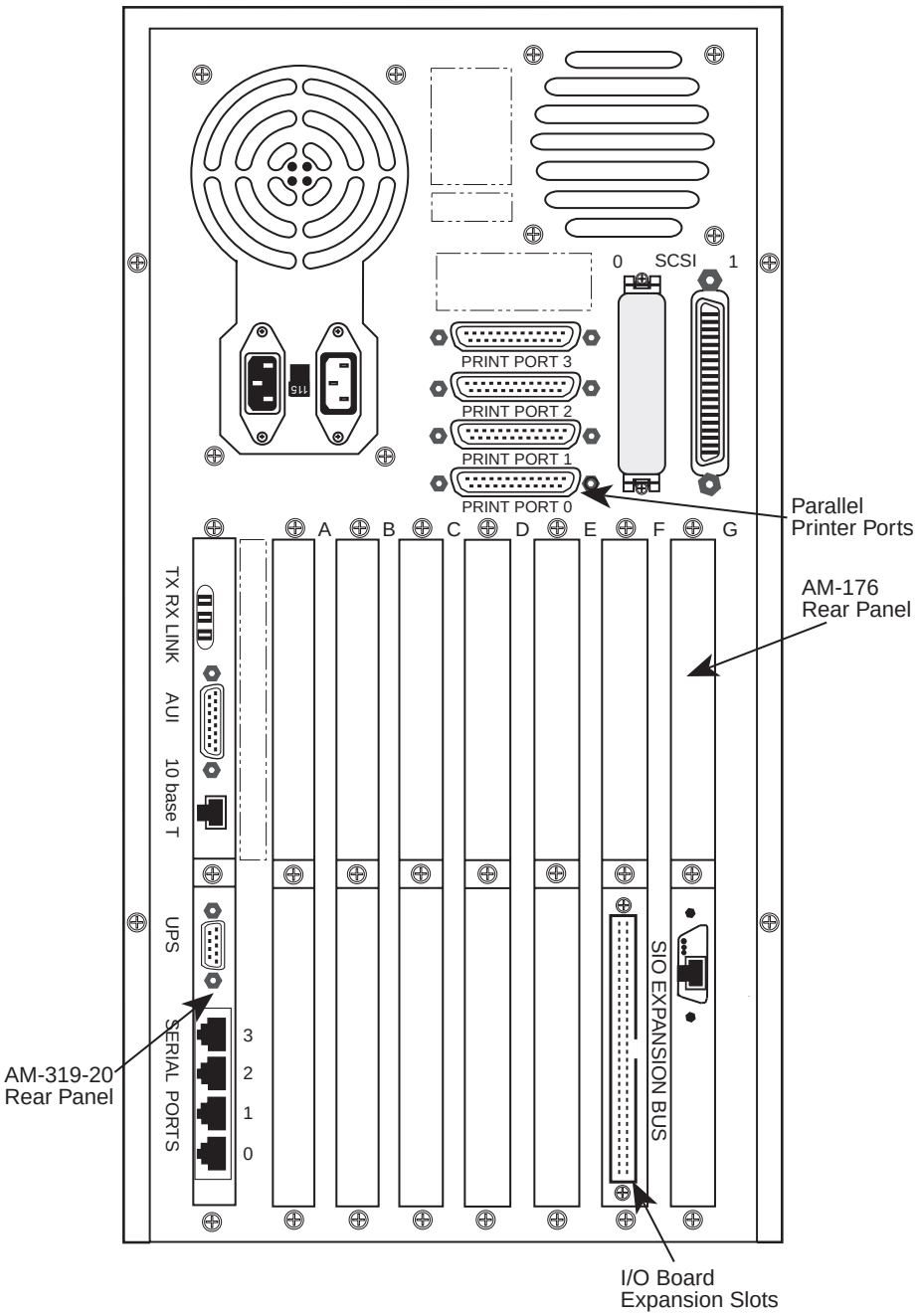


***Figure F-3: Deskside Chassis Rear Panel Configuration***

## Installing the SCSI Cable

The Roadrunner 75 board includes a 68-pin wide SCSI connector. Please refer to Chapter 2 for more information on SCSI devices and cables.

1. Once you have determined whether you are connecting to a narrow or wide SCSI bus:
    - For a wide SCSI bus implementation, plug the 68-pin wide SCSI cable into the Roadrunner 75 board at J2.

- **or**
- For a narrow SCSI bus implementation, install the 68-to-50 pin adapter included in your wide-to-narrow SCSI host adapter kit in J2 of the Roadrunner 75 board. Then plug the narrow SCSI cable into the 68-to-50 pin adapter.

2. Plug in connectors to SCSI disk drives and tape drives, as required. If you are connecting wide SCSI devices to a narrow cable, or vice-versa, be sure to use the appropriate adapter between the device and the cable connector.
3. Route SCSI cable to the SCSI slot on the rear panel.
4. Make sure SCSI bus is terminated properly. This normally means plugging an external terminator into the external SCSI port on the rear panel. See Appendix A for more information on SCSI termination.

Please refer to Chapter 2 for compatibility and additional information on the SCSI devices and cabling.

## FINISHING UP

1. Install the system logo plate on the display panel near the power switch on the bezel.
2. Re-attach all cables to the AM-319-20, as required:
   - Printer cables at P5 (LPT0), P2 (LPT1), P1 (LPT3), and P4 (LPT3)
   - 20-pin display cable at P11

The hardware portion of the upgrade is complete. Return to Chapter 6 for the testing and booting procedures for the Roadrunner 75. Perform these procedures before replacing the top cover, in case you need to make some adjustments. When you are done, fasten top cover with the 4 original screws.

# Appendix G - Super Eagle & AM-6000 in AM-990 or AM-990 Jumbo Chassis Upgrade

The following instructions explain the process of installing an Roadrunner 75 into a Super Eagle or AM-6000 computer in an AM-990 and AM-990 jumbo chassis. The upgrade kit includes all the necessary hardware for installing the Roadrunner 75 board.

## PREPARING FOR THE UPGRADE

Before embarking on this upgrade, please ensure you have completed all of the steps in Chapter 5 "Beginning a Roadrunner Upgrade." Do not begin the hardware installation until you've performed all of the necessary preliminary processes.

While your computer's hardware is exposed and the AC power cord is unplugged, the components are vulnerable to damage caused by static discharge. Before you handle any computer hardware, make certain your work area is properly protected against static discharge.

## ACCESSING YOUR HARDWARE

1. Power down your computer. Remove all the cables attached to the rear panel, including the power cord.
2. Insert the key originally shipped with your computer in the door lock and open it.
3. To remove the top panel:
    - Swing the front door open to expose the screws that hold the top cover in place. See Figure G-1.
    - Remove the two Phillips-head screws that connect the top cover to the chassis.
    - Remove the display key from the front panel before you attempt to remove the top cover.
    - Slide the top cover forward and lift it off. Set it aside.

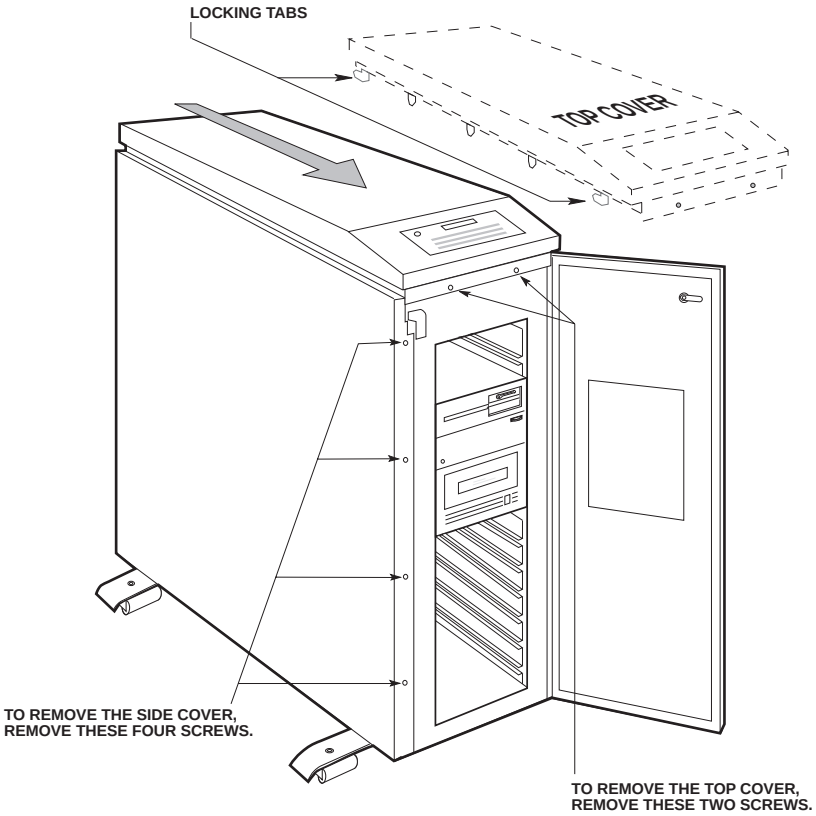


***Figure G-1: AM-990 Enclosure Removal***

4. To remove the side and rear panels:
   - Swing the front door open to gain access to the screws that hold the side panel to the chassis.
   - Remove the four screws along the left edge (behind the front door). Lift the side panel, slide it to the front, and place it out of the way.

   For ease of assembly, lay the AM-990 chassis on its side, bezel away from you. We recommend that you place the chassis on a padded work surface. Remove the feet from the bottom of the chassis, or let them hang over the edge of a table.

   - Remove the card cage lid (DWF-20670-00) by removing the five screws and lifting it out of the way.
   - Remove the four screws that hold the rear I/O panel to the card cage and unplug I/O cable.
   - Move the rear I/O panel out of the way. For SuperEagle systems, you will be installing a new I/O rear panel, included in your upgrade kit.

## ASSEMBLING THE NEW REAR I/O PANEL (SUPEREAGLE ONLY)

A new, extended rear panel assembly is included in your upgrade kit.

1. Attach the four parallel printer ports to the first slot in the rear panel (when installed in the chassis, this should be the first slot above the AM-319-20 board).

2. Mount the Roadrunner 75 connector bracket in the last I/O slot, furthest away from the printer ports.
3. Attach the I/O paddle cards to the second through the fifth slots on the rear panel. Refer to Chapter 2 for I/O board compatibility. Make certain the last I/O board is terminated and the I/O cable stops on the last connection.
4. Lay the I/O panel assembly flat next to the chassis, as if it were ready to tilt up 90° and attach to the chassis (with paddle cards up).

## REMOVING THE OLD CPU BOARD

1. Unplug the following:
   - SCSI cable
   - X bus cables (label the connectors on this end of the cable to identify them as C/S or A/D when attaching them to the connectors on the Roadrunner 75 board)
   - DC power cable

   **AM-6000 Systems only**

   - AM-176 Serial I/O cable. Also remove the other end of this cable from the rear panel and discard the cable. Use a filler plate, included in the upgrade kit, to fill the hole in the rear panel where the connector used to be.
   - AM-176 Ethernet cable. Also remove the other end of this cable from the rear panel and discard the cable.
2. Slide the CPU board and its mounting plate out the rear panel and set it aside.

## INSTALLING THE ROADRUNNER 75 BOARD

1. Assemble Roadrunner 75 board to the mounting plate (DWF-20762-01) with four Phillips pan-head screws (.312" long).
2. Fasten the nylon screw included in the kit into the center threaded standoff in the front of the card cage, so when you slide the Roadrunner 75 board into position, there is no possibility of shorting the board electronics to the card cage.

   If you put the Roadrunner 75 into a slot other than the one recommended in step 6 below, you may need to put the screw into a different standoff. The important thing is that the nylon screw keeps the board electronics from shorting to the metal card cage.

3. Install memory SIMMs in **pairs of equal capacity**. Please refer to Table 3-1 for explicit configurations to accomplish the desired total memory.
4. Carefully slide the mounting plate, with the Roadrunner 75 board mounted on it, into the fourth nylon card guide from the top to allow room for all the I/O paddle cards. Make sure you orient the Roadrunner 75 board so the SCSI connector is toward the rear of the chassis.

   In the Jumbo chassis, you can use the fifth or sixth slot instead of the fourth. If you do, be sure to install the nylon screw into the proper standoff in step 2, above.

Also, be sure there is enough room for the CPU fan under the card cage cover plate.

5. Plug in the DC power connector from the power supply at P4 on the Roadrunner 75 board.

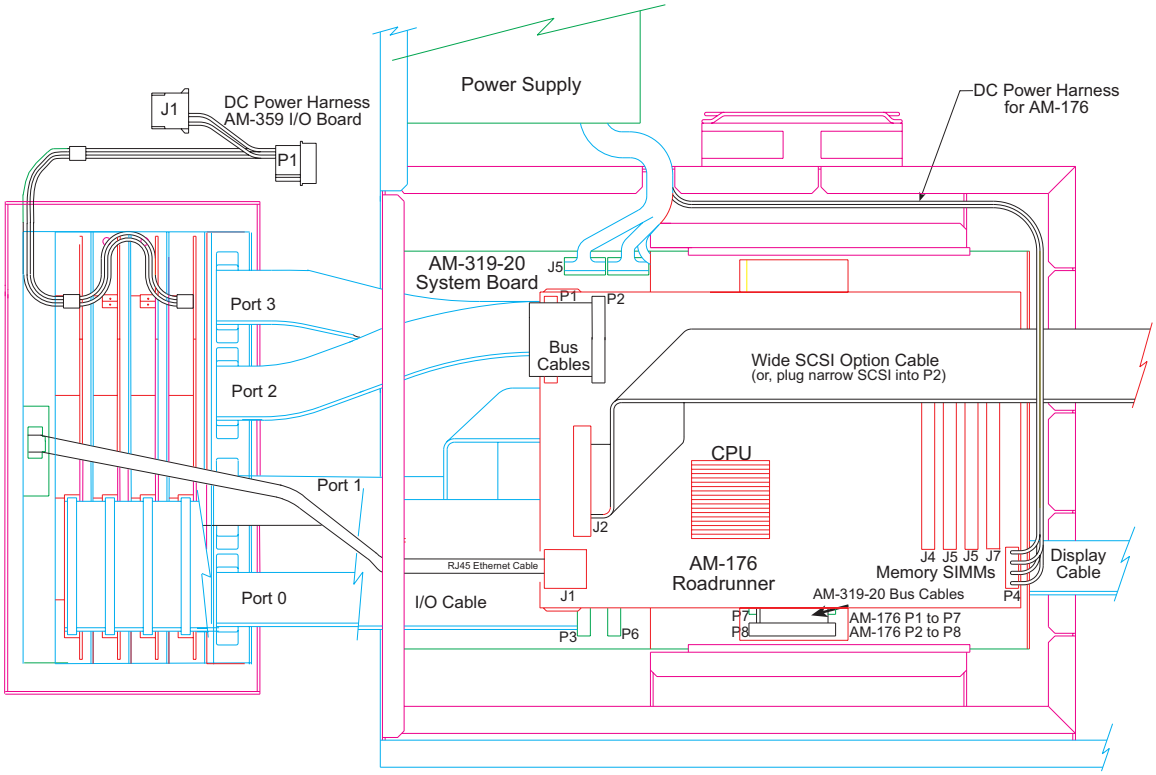


***Figure G-2: AM-319-20 and Roadrunner 75 Cable Routing***

## X-Bus Cable Routing

These cables have keyed connectors. It is vital that you always align the red stripe on the cable with pin-1 on the connector.

Connect the two Roadrunner X-bus cables (originating at the AM-319-20 board) to the Roadrunner 75 board, as follows:

- C/S bus cable into P2 on the Roadrunner 75 board (from P8 on the AM-319-20 board)
- A/D bus cable into P1 on the Roadrunner 75 board (from P7 on the AM-319-20 board)

## Installing the SCSI Cable

The Roadrunner 75 board includes a 68 pin wide SCSI connector. Please refer to Chapter 2 for more information on SCSI devices and cables.

1. Once you have determined whether you are connecting to a narrow or wide SCSI bus:

- For a wide SCSI bus implementation, plug one end of the 68-pin wide SCSI cable into the Roadrunner 75 board at J2.

**or**

- For a narrow SCSI bus implementation, install the 68-to-50 pin adapter included in your wide-to-narrow SCSI host adapter kit in J2 of the Roadrunner 75 board. Then plug one end of the narrow SCSI cable into the 68-to-50 pin adapter.

2. Fix the Roadrunner 75 board with the retainer bracket (DWF-20782-00) provided in the kit. Screw the bracket into the standoff on the Roadrunner 75 mounting plate, and insert the wider of the two tabs on the bracket into the slot on the card cage. When oriented correctly, the bracket will not be able to swivel enough to touch the circuit board. See Figures G-3 and G-4.

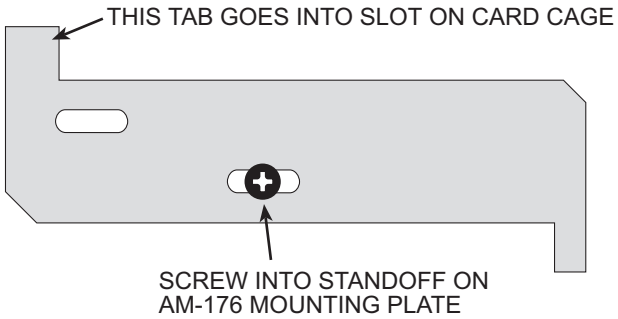


***Figure G-3: Retainer Bracket (detail)***

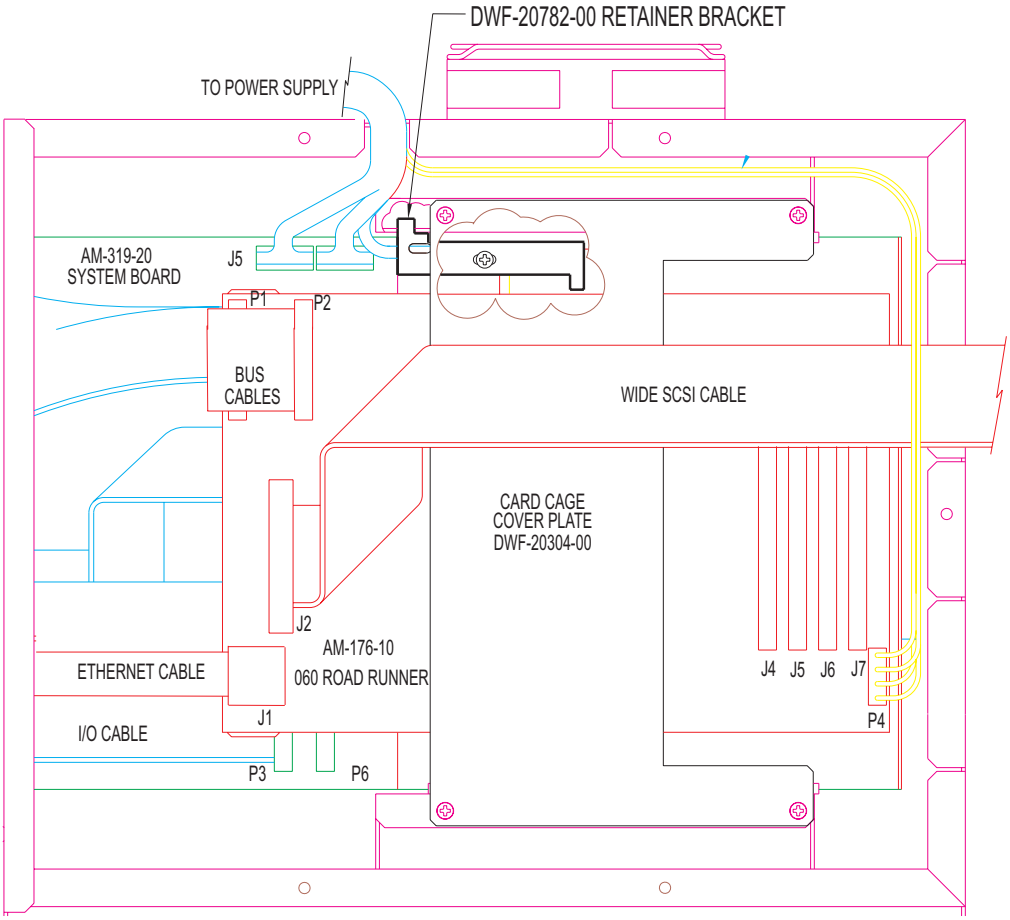


***Figure G-4: Roadrunner 75 Retainer Bracket Placement***

1. Mount the card cage cover plate (DWF-20304-00) on top of the card cage and attach with four screws, on per corner.
2. Route the SCSI bus cable over the top of the cover plate so it cannot interfere with the fan on the Roadrunner 75 board.
3. Route the SCSI cable to the SCSI peripherals and out to the external SCSI connector on the internal top panel or on the rear of the display panel. Plug in the cable to each SCSI disk or tape drive.

If you are connecting Wide SCSI devices to a narrow cable, or vice-versa, be sure to use the appropriate adapter between the device and the cable connector.

4. Make sure the SCSI cable is terminated properly. This normally means plugging an active external terminator into the external SCSI port on the internal top panel or on the rear of the display panel. See Appendix A for more information on SCSI termination.

Please refer to Chapter 2 for compatibility and instructions on the installation of SCSI devices and cabling.

# INSTALLING NEW REAR I/O PANEL

## SuperEagle Systems

To ensure all the I/O boards have adequate space, we have enlarged the card cage by adding a new, deeper rear panel. Once you've attached the I/O paddle cards to the new I/O rear panel, install it as follows:

1. Using the twelve ½" x 6/32 standoffs in your kit, make four sets of spacers (1.5" long each), by threading three standoffs together.
2. Fasten the spacers into the four corner holes on the rear of the card cage.
3. Connect the I/O paddle board cable to the A Channel at P3 on the AM-319-20 board, and the optional B Channel cable at P6.
4. Install the AM-368-20 Ethernet connector board in the 15-pin D-Sub connector hole in the Roadrunner 75 connector mounting plate.
5. At J1 on the Roadrunner 75 board, plug in one end of the RJ45 (Ethernet) cable included in your product kit. Plug the other end into the RJ-45 connector on the AM-368-20 board already mounted to the rear panel.
6. At P6 on the Roadrunner 75 board, plug one end of the optional 6-conductor Ethernet indicator cable which may be included in your product kit. Plug the other end into the 6-pin connector on the AM-368-20 board on the rear panel.
7. Tilt the I/O panel up and fasten to the four new spacers you mounted to the back of the card cage.

## AM-6000 Systems

1. Connect the I/O paddle board cable to the A Channel at P3 on the AM-319-20 board, and the optional B Channel cable at P6.
2. Install the AM-368-20 Ethernet connector board in the 15-pin D-Sub connector hole in the Roadrunner 75 connector mounting plate.
3. At J1 on the Roadrunner 75 board, plug in one end of the RJ45 (Ethernet) cable included in your product kit. Plug the other end into the RJ-45 connector on the AM-368-20 board already mounted to the rear panel.
4. At P6 on the Roadrunner 75 board, plug one end of the optional 6-conductor Ethernet indicator cable which may be included in your product kit. Plug the other end into the 6-pin connector on the AM-368-20 board on the rear panel.
5. Tilt the I/O panel up and fasten to the four new spacers you mounted to the back of the card cage.

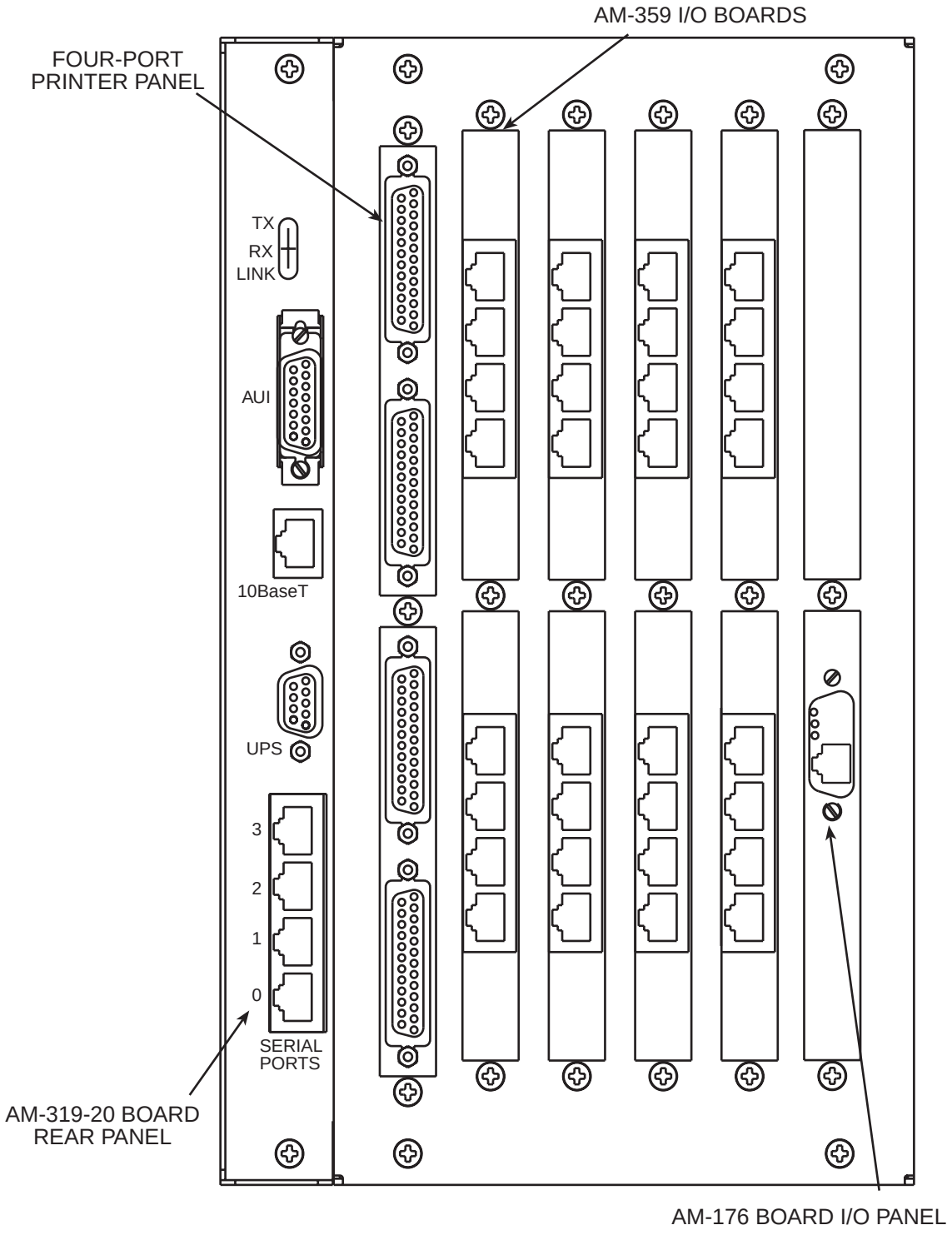


***Figure G-5: AM-990 Rear Panel Configuration***

## FINISHING UP

The hardware portion of the upgrade is complete. Return to Chapter 6 for the testing and booting procedures for the Roadrunner 75. Perform these procedures after attaching the computer's enclosure, in case you need to make some adjustments.

Once your system completes the testing procedures successfully, replace the enclosure, as follows:

1. Replace the card cage lid and attach with five screws
2. Replace the side panel and tighten the four screws along the left edge
3. Replace the top cover. Tighten the two screws along the top edge.
4. Close and lock the front door.
5. Install the system logo plate on the front door near the Alpha Microsystems logo.

# Appendix H: Flash Memory Booting Option Details

The Flash Memory Booting Option contained in most AM-7000 and Roadrunner 75 based systems allows you to boot your system from flash memory if for some reason the booting software on the disk becomes inoperable.

## FLASH MEMORY ORGANIZATION

When booting from flash memory, the computer's memory is allocated as shown in figure H-1.

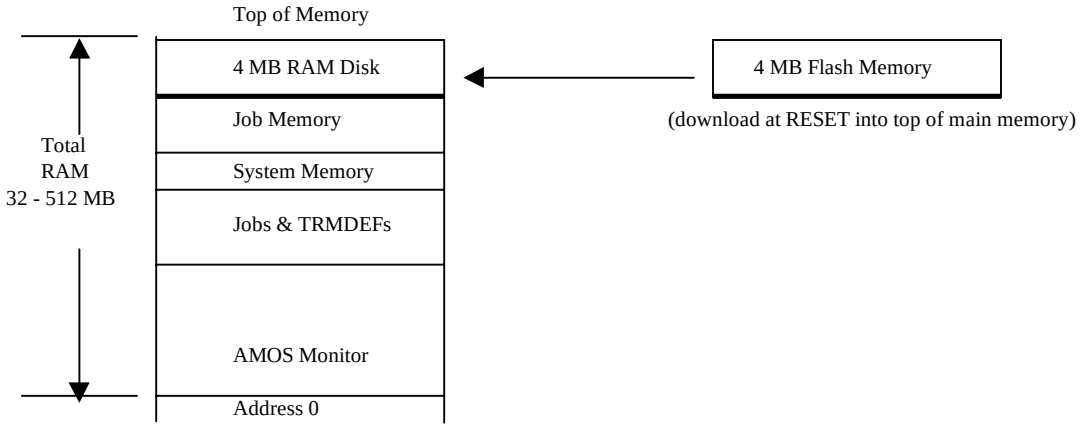


***Figure H-1: Roadrunner 75 Flash Boot Memory Map***

## FLASH MEMORY OPERATION

When the Roadrunner 75 is turned on or reset, the boot code sizes main memory. If FLASH is selected as the boot device, 4MB is subtracted from the total memory size and the adjusted size is made available for AMOS. The upper 4MB of memory is reserved and is referred to as a RAM disk.

Next, the contents of the flash memory is copied to the upper 4MB area of RAM thereby loading the RAM disk. There is a RAM disk driver (`ram.dvr`) imbedded in the AMOS monitor that emulates a disk drive. The AMOS monitor specified on the CMOS setup screen is then loaded from the RAM disk into low memory. The AMOS monitor then begins execution in a normal manner.

When AMOS is "up and running", all modifications to data on the RAM disk are only temporary and will be lost on reset or power failure. In order to save any changes made to the RAM disk to

the flash memory, a special software utility must be used. This utility is described at the end of this Appendix.

## BOOTING FROM THE ROADRUNNER 75 FLASH MEMORY.

The Roadrunner 75 flash memory is configured during the manufacturing process to contain a minimal AMOS system. It includes an AMOS monitor, several versions of system initialization files, commonly used device drivers and programs. As configured, it should boot properly and run on most Roadrunner 75 based configurations. To boot from the Roadrunner 75 flash memory do the following:

1. Turn power on or press the reset button on your computer.
2. When "Press <ESC> to enter setup" appears on the terminal or "CS" appears on the status display, press the <ESC> key to enter the CMOS Configuration Menu>
3. Using the arrow keys select Flash for the Primary boot device type.
4. Enter the name of the boot monitor and the boot initialization filenames. Normally these will be AMOS32.MON for the monitor name and AM7000.INI for the initialization filename.
5. Press <ESC> and then enter "Y" to save the changes.

The computer should then proceed to boot from the Roadrunner 75 flash memory.

## STANDARD AM7000.INI CONTENTS

The AM7000.INI file includes support for the following:

| | |
|---|---|
| SUB: | SCSI disk drive with SCSI ID 0 |
| STR0: | 1/4 inch cartridge streaming tape drive |
| DAT0: | DAT cartridge tape drive |
| MTX0: | Exabyte cartridge tape drive |
| AM319S Ethernet controller on the AM310-20 board | |
| AM176-10 Ethernet controller at 10Mb per second | |
| TCP/IP with telnet and ftp capabilities | |
| CDROM reader using the ACD program and driver | |
| On-board serial ports at 19200 baud using AM62a terminal driver | |

Also included in the flash AMOS configuration is a very simple system initialization file, SINGLE.INI. This only activates the terminal on serial port 0 at 19200 baud using the AM62A terminal driver. It does not define any extra peripheral devices or communications capabilities. This initialization file can be used for troubleshooting if the more complete initialization files in the flash fail during the boot process.

The AMOS system contained in the flash can provide enough capabilities to enable you to check the disk drive and copy files from tape or CD back to the disk drive. Of course if the disk drive has a physical hardware problem, it will need to be repaired or replaced.

## ENHANCING FLASH MEMORY CONTENTS

The original AMOS system contained in the flash memory is a single user system since it has not been PIC encoded to the SSD. As such, while it will work fine for accessing tapes and disk, networking is not supported. If network support is needed, the AMOS monitor must be PIC encoded by using the OSINST program. Additionally, for full network support, several configuration files in the TCP directory must be modified. Once these modifications are made to the copy of AMOS in the RAM disk, the system can be saved to flash memory using the FLUTIL program.

Changes needed in the AlphaTCP configuration files are as follows:

### File NETWRK.

Change the IP address to the assigned IP address for the computer. The first line corresponds to the Roadrunner 75 Ethernet port. The second line corresponds to the AM319-20 Ethernet port. This is the same order as the definitions for the Ethernet ports in the CONFIG file.

### File RESOLV.

Set the NAMESERVER line's IP address to the address of your nameserver if you have one.

### File CONFIG. (optional)

If you have a default router you may specify its IP address in the "start route" statement on the last line of the CONFIG file. Remember to remove the # character at the beginning of the line.

## FLASH MEMORY CONTENTS

The following AMOS monitors and system initialization files are included in the flash memory system:

## Monitors

| | |
|---|---|
| AMOS32 MON<br>AM7000 MON<br>7KRAM MON | These are three identical monitors with the RAM disk driver embedded as the system disk driver |
| AMSS7K MON | This has the SCSI disk driver embedded as the system disk driver |

## INIs

| | |
|---|---|
| AM7000 INI<br>AMOS32 INI | supports 4 terminal, SCSI disk, tape, Ethernet tcp/ip |
| SINGLE INI | Minimal support. 1 terminal, no SCSI devices, no Ethernet |

See details of the above INIs in Appendix J.

## Device drivers for the following:

1/4" cartridge streamer, Exabyte, and DAT tape drives
RAM disk, SCSI disk, CDROM, and VDK virtual disk
Roadrunner 75 Ethernet and AM-319-20 Ethernet
Alpha, AM62, AM62A, AM65, AM65A, AM75, and VT100 terminals

## FLUTIL SOFTWARE UTILITY

Occasionally, modifications must be made to the AMOS configuration or other software stored in flash memory. FLUTIL helps maintain the contents of the Roadrunner 75 flash memory. The flash memory can be erased and reprogrammed with the contents of the current RAM disk. The current contents of the flash memory can be saved to a data file which can then be used to recover in the event that the contents of the flash memory become unusable.

During modification of the AMOS configuration and updating of the flash memory, it is important that no other users are using the system.

Remember that any changes made to files on the RAM disk are not permanent, and will disappear if the computer is re-started. Changes must be saved using this program to become permanent.

## Flash memory Update

Before using this program to update the flash memory, any configuration changes should be thoroughly tested. This normally means that you must `MONTST` the new configuration from the RAM disk and verify that:

1. The system does boot properly
2. The system does work properly and all peripherals are working properly

Before running the FLUTIL program, log into OPR: and run a DSKANA on your RAM disk. Erase any old files like *.BAK, *.OLD, and *.LST which you don't want programmed into the Flash memory. Also, make sure that your JOB is NOT running MULTI.

In the unlikely event that the flash memory update fails catastrophically (i.e. a power failure occurs), insure that you have created and saved the flash memory recovery files for the current operating environment.

To update the flash memory, log into `OPR:` and type:

**`FLUTIL`** RETURN,

The following menu will be displayed.

```
Flash Memory Utility Program Version 1.0(106)

 1. UPDATE Flash Memory with current RAM disk

 2. Copy Flash Memory to Image File

 3. Copy Image File to Flash Memory

 4. Exit

        Enter choice:
```

Enter **1** RETURN to begin the flash memory update. You will see a warning message and then be asked if you want to continue. To continue with the update type **Y** return. Until the update is successfully completed, the system cannot be re-booted from the flash memory.

First the flash memory contents are erased. Next the contents of the RAM disk are programmed into the flash memory. Then the contents of the RAM disk and the flash memory are compared to verify successful flash memory update. During the program and verification phases, progress is indicated on the terminal screen, and all other jobs are suspended.

If the update is not successful, a warning message is displayed. Also if you try to exit the program while the flash memory contents are compromised, a warning message is displayed. After an unsuccessful update, the system will probably not re-boot properly from flash memory, but should still boot properly from disk

# Appendix I: Boot Messages

The following messages may appear on the terminal connected to port 0 during the boot process:

**`Welcome to the Alpha Micro Computer System.`**
This is just a friendly greeting so you know your computer is starting.

**`Press <ESC> to enter setup.`**
This message occurs at the same time as CS on the status display. If you press the <ESC> key now, the computer will display the CMOS configuration menu. If you press CTRL-D now the computer will start the Diagnostic Self-Test routines.

**`Initializing boot device`**
The computer is setting up the device you are booting from.

**`Initializing tape device`**
The computer is setting up the tape drive to read the warm boot tape.

**`Initializing from AM176-10 flash memory.`**
The computer will use the disk image stored in the flash memory of the AM176-10 board for booting.

**`Initializing from AM703 flash board.`**
The computer will use the disk image stored in the flash memory of the AM703 board for booting.

**`Initializing serial port transfer.`**
The computer will receive a disk image file from serial port 0 on the AM176-10 board and use it for booting.

**`Flash data transfer complete.`**
The contents of flash memory have been copied to RAM.

**`Looking for DSK0:[1,4]`**
The computer is searching for the SYS: PPN on the boot disk.

**`Looking for AMOS monitor`**
The computer is searching for the AMOS monitor files specified in CMOS.

**`Starting AMOS`**
The computer boot process is finished and AMOS is starting to run.

**`Monitor not found`**
The computer could not find the AMOS monitor file that is specified in CMOS on the boot device.

**`Initialization file not found`**
The computer could not find the system initialization file that is specified in CMOS on the boot device.

**`Error transferring from flash.`**

The computer was unable to copy the contents of the flash memory to RAM.

**`Incorrect boot checksum -- halting`**

The checksum of the boot program is incorrect so the boot process cannot safely continue.

**`Fatal time-out error`**

An unexpected hardware bus error occurred.

**`Fatal error -- system halting.`**

`The boot process cannot safely continue due to an error.`

# Appendix J: Standard Flash and Disk INIs

The following files are sample INI files for both hard disk and flash disk booting for your reference. Bold text indicates commands that are specific to the Roadrunner 75 CPU.

## HARD DISK INI FILES

## AM7000.INI

```
; New AM176-10 -- AM7000.INI boot from Disk.
:T
JOBS 100
JOBALC JOB0,JOB1,JOB2,JOB3
JOBALC NETLOG,TCPEMU
;JOBALC NETSER
JOBALC LOGJOB
QUEUE 4000
load trmdef.lit
;
TRMDEF TRM0,A31810=0:19200,AM62A,100,100,100,editor=20
xy=24
TRMDEF TRM1,A31810=1:19200,AM62A,100,100,100,editor=20
TRMDEF TRM2,A31810=2:19200,AM62A,100,100,100,editor=20
TRMDEF TRM3,A31810=3:19200,AM62A,100,100,100,editor=20
;TRMDEF NETSER,PSEUDO,NULL,100,100,100
TRMDEF LOGTRM,PSEUDO,NULL,100,100,100
TRMDEF NETLOG,PSEUDO,NULL,100,100,100
TRMDEF TCPEMU,PSEUDO,NULL,100,100,100
TDVDEF *.TDV
;
del *
VER
PCI7K.LIT           ;INITIALIZE PCI BUS
SCZDSP SCZ7K.SYS/EW:0/EU/ET
;SCZDSP SIM7K.SYS
DEVTBL DSK
;DEVTBL NEW
DEVTBL RAM
DEVTBL TRM,RES,MEM,/STR0
;DEVTBL /DAT0,MTX0
BITMAP DSK
;BITMAP NEW
BITMAP ram,514,0

MSGINI 20K
ERSATZ ERSATZ.ERZ

system system.lit
SYSTEM SYSMSG.USA
SYSTEM CMDLIN.SYS
SYSTEM SCNWLD.SYS
;SYSTEM LEVEL7.SYS/N/E/P JCB DISASM MAP TCB IDENT DDB
SYSTEM DCACHE.SYS/N/M/U 2M
SYSTEM DVR:DSK/N 200K 50
;SYSTEM DVR:NEW/N 200K 50
SYSTEM DVR:TRM.DVR
```

```
SYSTEM ram.DVR[1,6]
SYSTEM STR.DVR[1,6]
;SYSTEM DAT.DVR[1,6]
;SYSTEM MTX.DVR[1,6]
;SYSTEM DVR:PCILSI.LDV/N/H/T:200/R:200 ;100MB
SYSTEM DVR:PCILSI.LDV/N/T:200/R:200    ;10MB
SYSTEM DVR:AM319S.LDV/N                ;10MB
SYSTEM RTI.LIT
SYSTEM TCP:IPCINI/N 100 100K
SYSTEM TCP:TFTPD.LIT
SYSTEM TCP:TFTPD.RTI
SYSTEM TCP:FTPD.LIT
SYSTEM TCP:FTPD.RTI
SYSTEM SYS:FTP.LIT
SYSTEM SYS:FTP.RTI
SYSTEM SYS:TELNET.LIT
SYSTEM SYS:TELNET.RTI
SYSTEM
SMEM 6M

LOG OPR:
SYSTEM SERVICE
LOG SYS:
load setjob
SETJOB JOB1,TRM1,500k,JOB.JIN
SETJOB JOB2,TRM2,500k,JOB.JIN
SETJOB JOB3,TRM3,500k,JOB.JIN
;SETJOB  NETSER,NETSER,100K,NETSER.LIT
SETJOB  LOGJOB,LOGTRM,100K,LOGJOB.NIN

SETJOB  NETLOG,NETLOG,50K
SETJOB  TCPEMU,TCPEMU,5000K,TCP:GOTCP.CMD
;
SLEEP 2
LOG OPR:
JOBPRI TCPEMU 254
SET DYN
LOG SYS:
SET HEX
MOUNT DSK:
si
MEMORY 0
```

## AMOS32.INI

```
; New am176-10 - AMOS32.INI boot from Disk
:T
JOBS 100
JOBALC JOB0,JOB1,JOB2,JOB3
JOBALC NETLOG,TCPEMU
;JOBALC NETSER
;JOBALC LOGJOB
QUEUE 4000
load trmdef.lit
;
TRMDEF TRM0,A31810=0:19200,AM62A,100,100,100,editor=20
xy=24
TRMDEF TRM1,A31810=1:19200,AM62A,100,100,100,editor=20
TRMDEF TRM2,A31810=2:19200,AM62A,100,100,100,editor=20
TRMDEF TRM3,A31810=3:19200,AM62A,100,100,100,editor=20
;TRMDEF NETSER,PSEUDO,NULL,100,100,100
;TRMDEF LOGTRM,PSEUDO,NULL,100,100,100
TRMDEF NETLOG,PSEUDO,NULL,100,100,100
TRMDEF TCPEMU,PSEUDO,NULL,100,100,100
;
del *
TDVDEF *.TDV
```

```
VER
PCI7K.LIT
SCZDSP SCZ7K.SYS/EW:0/EU/ET
;SCZDSP SIM7K.SYS
DEVTBL DSK
;devtbl new
DEVTBL RAM
DEVTBL TRM,RES,MEM,/STR0
;DEVTBL /DAT0,MTX0
BITMAP DSK
;BITMAP NEW
BITMAP ram,514,0

MSGINI 20K
ERSATZ ERSATZ.ERZ

system system.lit
SYSTEM SYSMSG.USA
SYSTEM CMDLIN.SYS
SYSTEM SCNWLD.SYS
SYSTEM DCACHE.SYS/N/M/U 2M
;;SYSTEM LEVEL7.SYS/N/E/P JCB DISASM MAP TCB IDENT DDB
SYSTEM DVR:TRM.DVR
SYSTEM ram.DVR[1,6]
SYSTEM STR.DVR[1,6]
;SYSTEM DAT.DVR[1,6]
;SYSTEM MTX.DVR[1,6]
SYSTEM DVR:DSK/N 200K 50
;SYSTEM DVR:NEW/N 200K 50
;SYSTEM DVR:PCILSI.LDV/N/H/T:200/R:200        ;100mb
SYSTEM DVR:PCILSI.LDV/N/T:200/R:200           ;10mb
SYSTEM DVR:AM319S.LDV/N                       ;10MB
;
SYSTEM RTI.LIT
SYSTEM TCP:IPCINI/N 100 100K
SYSTEM TCP:FTPD.LIT
SYSTEM TCP:FTPD.RTI
SYSTEM SYS:FTP.LIT
SYSTEM SYS:FTP.RTI
SYSTEM SYS:TELNET.LIT
SYSTEM SYS:TELNET.RTI
SYSTEM
SMEM 6M
LOG OPR:
SYSTEM SERVICE
LOG SYS:
load setjob
SETJOB JOB1,TRM1,500k,JOB.JIN
SETJOB JOB2,TRM2,500k,JOB.JIN
SETJOB JOB3,TRM3,500k,JOB.JIN
;SETJOB  NETSER,NETSER,100K,NETSER.LIT
;SETJOB  LOGJOB,LOGTRM,100K,LOGJOB.NIN

SETJOB  NETLOG,NETLOG,50K
SETJOB  TCPEMU,TCPEMU,5000K,TCP:GOTCP.CMD
;
SLEEP 2
LOG OPR:
JOBPRI TCPEMU 254
SET DYN
LOG SYS:
SET HEX
SET DSKERR
MOUNT DSK:
si
MEMORY 0
```

# FLASH DISK INI FILES

## SINGLE INI

```
:T
; am176-10 Single.INI boot from Flash Disk
JOBS 5
JOBALC JOB0
QUEUE 4000
;
TRMDEF TRM0,A31810=0:19200,AM62A,200,200,100,EDITOR=5
ver
XY=24                                          ; Turn Graphics Off
PCI7K.LIT
;SCZDSP SIM7K.SYS
;
DEVTBL TRM,RES,MEM;/str0
;DEVTBL SUB               ;HARD DISK
BITMAP DSK,514,0          ;RAM  DISK
BITMAP SUB
;
ERSATZ ERSATZ.ERZ
;
SYSTEM SYSMSG.USA
SYSTEM CMDLIN.SYS
SYSTEM SCNWLD.SYS
SYSTEM DVR:TRM.DVR
SYSTEM DVR:STR.DVR
SYSTEM
;
LOG OPR:
SYSTEM SERVICE
;
LOG SYS:
SET DSKERR
SET HEX
;
DEL *
MEMORY 0
```

## AM-7000 INI

```
; New am176-10 - AM7000.INI boot from Flash Disk
:T
JOBS 100
JOBALC JOB0,JOB1,JOB2,JOB3
JOBALC NETLOG,TCPEMU
;JOBALC NETSER
JOBALC LOGJOB
QUEUE 4000
;
TRMDEF TRM0,A31810=0:19200,AM62A,100,100,100,editor=20
xy=24
TRMDEF TRM1,A31810=1:19200,AM62A,100,100,100,editor=20
TRMDEF TRM2,A31810=2:19200,AM62A,100,100,100,editor=20
TRMDEF TRM3,A31810=3:19200,AM62A,100,100,100,editor=20
;TRMDEF NETSER,PSEUDO,NULL,100,100,100
TRMDEF LOGTRM,PSEUDO,NULL,100,100,100
TRMDEF NETLOG,PSEUDO,NULL,100,100,100
TRMDEF TCPEMU,PSEUDO,NULL,100,100,100
TDVDEF *.TDV
;
VER
```

```
PCI7K.LIT                  ;REQUIRED
SCZDSP SCZ7K.SYS/ew:0      ;/eu/et
DEVTBL SUB
DEVTBL TRM,RES,MEM,/STR0
;DEVTBL /DAT0,/MTX0
BITMAP DSK,514,0
BITMAP SUB
MSGINI 20K
ERSATZ ERSATZ.ERZ

SYSTEM SYSMSG.USA
SYSTEM CMDLIN.SYS
SYSTEM SCNWLD.SYS
SYSTEM DCACHE.SYS/N/M/U 2M
SYSTEM DVR:TRM.DVR
SYSTEM DVR:SUB.DVR/n 200k 50
SYSTEM DVR:STR.DVR
SYSTEM DVR:ACD.DVR
;SYSTEM DVR:DAT.DVR
;SYSTEM DVR:MTX.DVR
SYSTEM DVR:PCILSI.LDV/N/T:200/R:200    ;10mb
;SYSTEM DVR:PCILSI.LDV/N/H/T:200/R:200 ;100mb
SYSTEM DVR:AM319S.LDV/N                ;10MB
SYSTEM RTI.LIT
SYSTEM TCP:IPCINI/N 100 100K
SYSTEM TCP:FTPD.LIT
SYSTEM TCP:FTPD.RTI
SYSTEM SYS:FTP.LIT
SYSTEM SYS:FTP.RTI
SYSTEM SYS:TELNET.LIT
SYSTEM SYS:TELNET.RTI
SYSTEM
SMEM 8M

LOG SYSTEM SERVICE
;
SETJOB JOB1,TRM1,500k,START7.JIN
SETJOB JOB2,TRM2,500k,START7.JIN
SETJOB JOB3,TRM3,500k,START7.JIN
;SETJOB  NETSER,NETSER,100K,NETSER.LIT
SETJOB  LOGJOB,LOGTRM,100K,LOGJOB.NIN

SETJOB  NETLOG,NETLOG,50K
SETJOB  TCPEMU,TCPEMU,2000K,TCP:GOTCP.CMD
;
LOG OPR:
JOBPRI TCPEMU 254
SET DYN
LOG SYS:
SET HEX

MOUNT SUB:
SI
MEMORY 0
```

## AMOS32.INI

```
:T
; AMOS32.INI boot from Flash Disk...
JOBS 50
JOBALC JOB0,JOB1,JOB2,JOB3
JOBALC SPOOL,NETSER,NETLOG,TCPEMU
;
QUEUE 4000
;
LOAD LOAD.LIT
LOAD DEL.LIT
```

```
LOAD SYSMSG.USA
LOAD TRMDEF.LIT
LOAD DEVTBL.LIT
LOAD BITMAP.LIT
LOAD SYSTEM.LIT
LOAD MOUNT.LIT
;
TRMDEF TRM0,A31810=0:19200,AM62A,200,200,100,EDITOR=5
XY=24                                          ; Turn Graphics Off
TRMDEF TRM1,A31810=1:19200,AM62A,200,200,100,editor=5
TRMDEF TRM2,A31810=2:19200,AM62A,200,200,100,editor=5
TRMDEF TRM3,A31810=3:19200,AM62A,200,200,100,editor=5
TRMDEF DUMMY,PSEUDO,NULL,100,100,100
TRMDEF NETSER,PSEUDO,NULL,100,100,100
TRMDEF NETLOG,PSEUDO,NULL,100,100,100
TRMDEF TCPEMU,PSEUDO,NULL,100,100,100
TDVDEF *.TDV
;
VER
PCI7K.LIT
SCZDSP SCZ7K.SYS/ew:0     ;/eu/et
;
DEVTBL TRM,RES,MEM,TLP,/SEP0
DEVTBL SUB                ;HARD DISK
DEVTBL /STR0 ;/DAT0,/MTX0 ;TAPE DEVICES
BITMAP DSK,514,0          ;RAM  DISK
BITMAP SUB
MSGINI 20K
NETFAM
;
ERSATZ ERSATZ.ERZ
ERSATZ ETH101.ERZ
;
SYSTEM SYSMSG.USA
SYSTEM CMDLIN.SYS
SYSTEM SCNWLD.SYS
SYSTEM DVR:TRM.DVR
SYSTEM DVR:SEP.DVR
SYSTEM DVR:STR.DVR
;SYSTEM DVR:DAT.DVR
;SYSTEM DVR:MTX.DVR
SYSTEM DVR:ACD.DVR
SYSTEM DVR:TLP.DVR
;SYSTEM DVR:PCILSI/N/H/R:200/T:200     ;100mb
SYSTEM DVR:PCILSI/N/R:200/T:200        ;10mb
SYSTEM DVR:AM319S.LDV/N                ;10mb
SYSTEM DCACHE.SYS/N/M/U 2M
SYSTEM DVR:SUB/N 200K 50
SYSTEM RPC.SYS/N
SYSTEM RPCLOD.LIT
SYSTEM RTI.LIT
SYSTEM TCP:IPCINI/N 100 100K
SYSTEM TCP:TELNED.LIT
SYSTEM TCP:TELNED.RTI
SYSTEM TELNET.LIT
SYSTEM TELNET.RTI
SYSTEM TCP:FTPD.LIT
SYSTEM TCP:FTPD.RTI
SYSTEM SYS:FTP.LIT
SYSTEM SYS:FTP.RTI
SYSTEM TCP:LPD.LIT
SYSTEM TCP:LPD.RTI
SYSTEM TCP:LPR.LIT
SYSTEM TCP:LPR.RTI
SYSTEM
SMEM 8M
;
LOG OPR:
SYSTEM SERVICE
;
LOG SYS:
```

```
SET DSKERR
SET HEX
;
 MOUNT DSK:
DEL *
;
SETJOB SPOOL,DUMMY,10K,LPTINI SEP0.PIN
XFRSEL SEP0: RAW
;
SETJOB  NETSER,NETSER,100K,NETSER
WAIT NETSER
SETJOB  NETLOG,NETLOG,50K
SETJOB  TCPEMU,TCPEMU,2000K,TCP:GOTCP.CMD
SLEEP 5
LOG OPR:
DEMO
JOBPRI TCPEMU 254
SET DYN
;
SETJOB JOB1,TRM1,500k,START7.JIN
SETJOB JOB2,TRM2,500k,START7.JIN
SETJOB JOB3,TRM3,500K,START7.JIN
;
MEMORY 0
```